CONLUX

$1 and $5 BILLS VALIDATOR

NB-20
NBE-20 SERIES

Service Manual

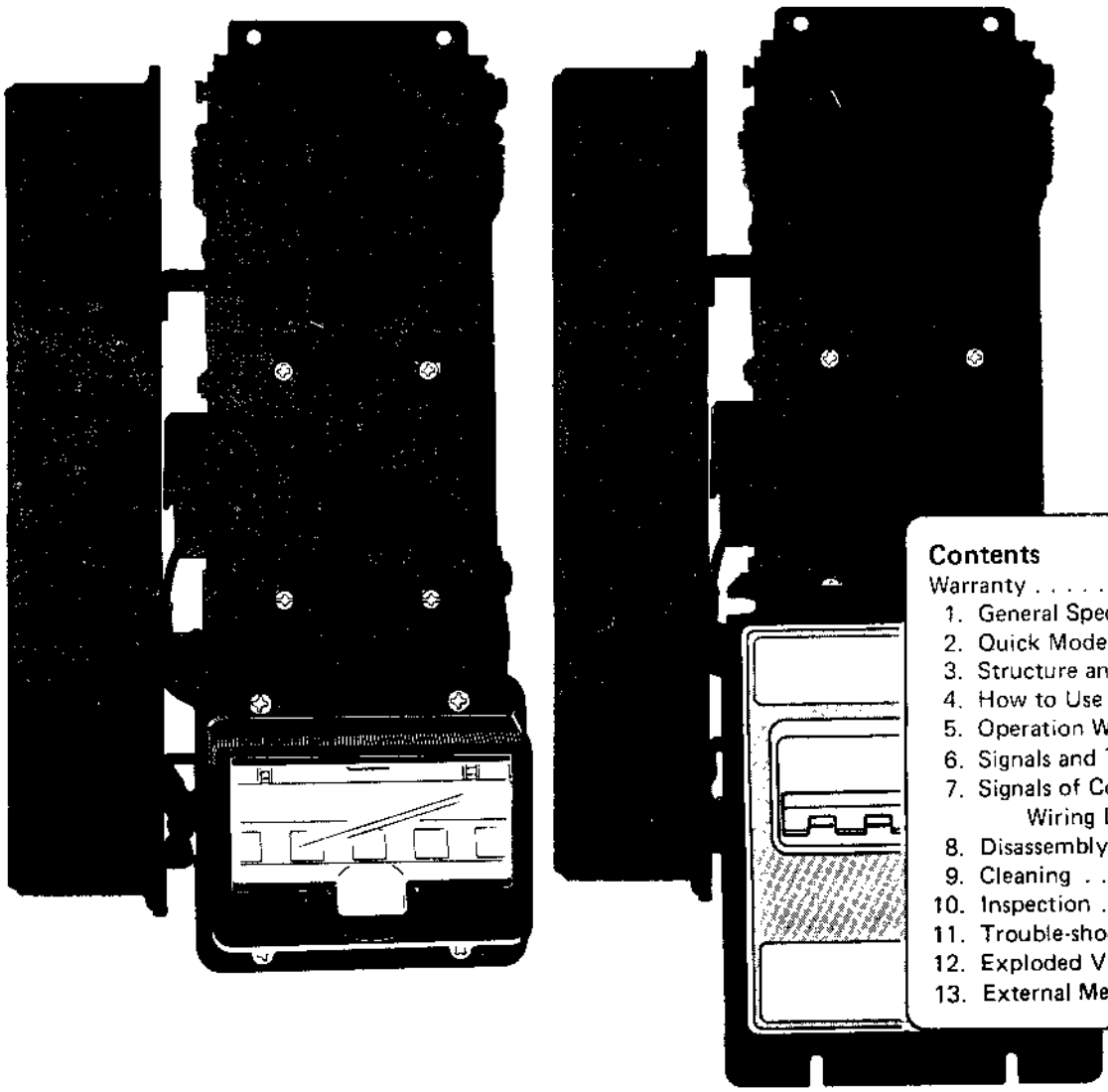

Contents

Warranty 2
1. General Specifications 3
2. Quick Model Reference Chart 4
3. Structure and Movement 5
4. How to Use 7
5. Operation Warning 9
6. Signals and Timing Charts 11
7. Signals of Connector and Wiring Diagram 20
8. Disassembly and Assembly Point 24
9. Cleaning 27
10. Inspection 27
11. Trouble-shooting 28
12. Exploded View and Parts List 32
13. External Measurements Diagrams 48

CONLUX USA CORPORATION

*When a $1 and $5 bills is inserted with Black side up and lengthwise into the Bill insertion opening the bill is automatically drawn in and discriminated.

*If the bill is judged authentic, it will be automatically accepted and stacked; if judged to be counterfeit it will be returned. Stacker Capacity is 115 bills.

*The NB-20 and NBE-20 series offers variations including a control box separator system and 200, 400 and 1000 bills stacker device.

- **NBE-20 SERIES**

This bill validator is a device for validating paper US $1 and $5 bills for correct identification which also includes a 1 bill escrow function.

Interfaces with the control side of automatic vending machines include the following.

1. Serial Communications (8 bit status word) System
2. Low Level non Isolated Interface (Photocoupler and TTL System)
3. Isolated or Low Level Interface (Photocoupler and Relay System)

The desired interface can be set by the system switches (DIP switches).

WARRANTY

CONLUX USA CORPORATION warrants all new coin changers and bill validators sold by it to be free from defective material and workmanship. Conlux will repair or replace, at its option, any part of the equipment which proves to be defective in materials or workmanship within a period of twenty-four (24) months from the date of original shipment from Conlux USA. This warranty includes salt water damage for twelve (12) months only from the date of original shipment from Conlux USA.

Other conditions applying to this warranty are as follows:

- This warranty will not apply to any equipment which has been, in Conlux's opinion, subject to: accident, abuse, misuse, neglect, improper installation, vandalism, or improper maintenance or repair by unauthorized service personnel; or is found to include parts other than genuine Conlux USA-supplied parts or options.

- Conlux will not be responsible for any expense incurred by the purchaser incidental to the repair or replacement of equipment covered by this warranty.

- Freight charges to send the equipment to Conlux or a Conlux-appointed Independent Authorized Service Center for warranty service will be the responsibility of the purchaser.

- THIS WARRANTY IS IN LIEU OF ALL OTHER WARRANTIES ORAL OR WRITTEN, EXPRESSED OR IMPLIED, INCLUDING WITHOUT LIMITATION, WARRANTIES OF MERCHANTABILITY, WARRANTIES OF FITNESS OF PURPOSE, AND ALL OTHER OBLIGATIONS OR LIABILITIES OF CONLUX. CONLUX NEITHER ASSUMES NOR AUTHORIZES ANY PERSON TO ASSUME FOR IT, ANY OTHER OBLIGATION OR LIABILITY IN CONNECTION WITH THIS WARRANTY POLICY.

- LIABILITY TO CONLUX USA AND ITS APPOINTED INDEPENDENT AUTHORIZED SERVICE CENTERS IS LIMITED TO THE REPAIR OR REPLACEMENT, AT THEIR OPTION, OF DEFECTIVE PARTS WITHIN THE CONLUX USA PRODUCT(S) AND DOES NOT INCLUDE INCIDENTAL AND CONSEQUENTIAL DAMAGES.

Effective July, 1996

1. GENERAL SPECIFICATIONS

Items	NB-20 SERIES	NBE-20 SERIES	
		NBE-20	NBE-21
Acceptable currency	U.S. $1 and $5 Bills		
Acceptance Rate	U.S. $1 Bill – 90% or greater U.S. $5 Bill – 80% or greater		
Cycle duration	approx. 2.1 sec. (up to vend signal risen)		
Bill Insertion Method	U.S. $1 Bill – Face up, lengthwise, 2 directions U.S. $5 Bill – Face up, lengthwise, 1 direction (Insert from the end with the widest margin)		
Validation System and Validation Conditions			
Shape Judgement	Capability (Yes)		
Graphics Judgement	Capability (Yes)		
Validation Method	Optical and Magnetic System		
1 Bill Escrow Function	No	Yes	
Prevention from Pull-Out	Capability (by lever system)		
Power source	AC 117 V ± 10 V, 60 Hz		AC 27V ± 3V, 60Hz
Temperature Range	+14°F ~ +122°F (-10°C ~ 50°C)		
Weight			
100-bills stacker Main body	approx. 2.5 kgs		
100-bills stacker Main body and bracket	approx. 6 kgs (Bracket: 3.3 kgs)		
400-bills stacker Main body	approx. 3.3 kgs		
1000-bills stacker Main body	approx. 8.7 kgs		
Rated electricity consumption	Less than 15 W during stand-by 20 W up to 40 W on running (when full)		

★ **Additional Specifications**

1. When a bill is judged to be valid
   If the inserted bill is judged to be a U.S. $1 or $5 bill, a "Vend" signal is sent out. (NB-20 series)
   When a paper bill has been inserted and is judged to be either a U.S. $1 or $5 bill, a valid signal is output in accordance with the settings of the system switches, and the machine waits in the escrow state. (NBE-20 series)
2. When a bill is judged to be invalid
   The following bills are ejected automatically from the insertion port after they have been inserted.
   - Bills shorter than 146 mm or longer than 166 mm.
   - Bills without sharp magnetization or engravings.
3. When bills are not accepted
   Bills are not accepted in the following cases.
   - When the power is off. (NB-20, NBE-20 series)
   - "Inhibit" signal is sent out. (NB-20 series)
   - When the Can Accept signal is "H" (using the serial communications system). (NBE-20 series)
   - When the "Can Use $1 Low" signal and the "Can Use $5 Low" signal are "H". (Photocoupler + TTL system or photocoupler + relay system). (NBE-20 series)

2. QUICK MODEL REFERENCE CHART

NB-20 SERIES

There are the following model names. Please choose the one which you require.

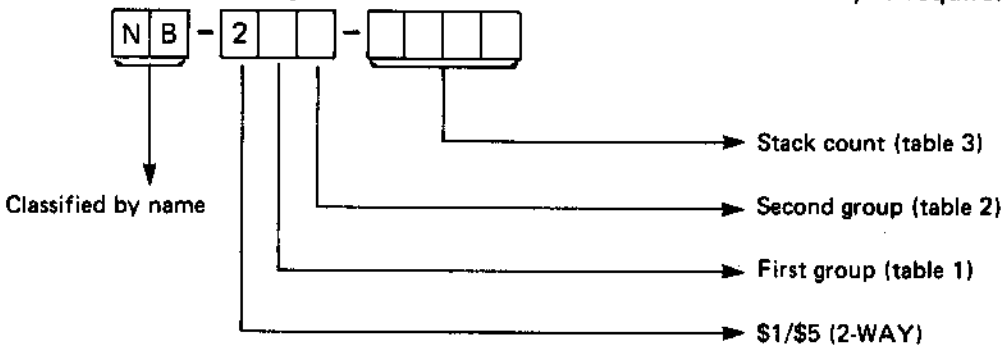

Table 1

Sign	Front mask			Counter harness		Power supply harness		Sub-harness		Power supply voltage (AC)	
	B	J		Yes	None	Yes	None	Yes	None	117V	27V
7	○				○		○		○	○	
9		○		○			○		○	○	
A		○			○		○		○		○
B	○				○		○		○		○
J	○			○			○		○		○

Table 2

Sign	Mounting bracket		Single unit type	Separated type
	None	Type A		
None		○	○	
A	○		○	
B	○			○

Table 3

Sign	Stack count
None	100
200	200
400	400
1000	1000

Note: *Mounting bracket Type A is for Coca Cola Co.

NBE-20 SERIES

There are the following model names. Please choose the one which you require.

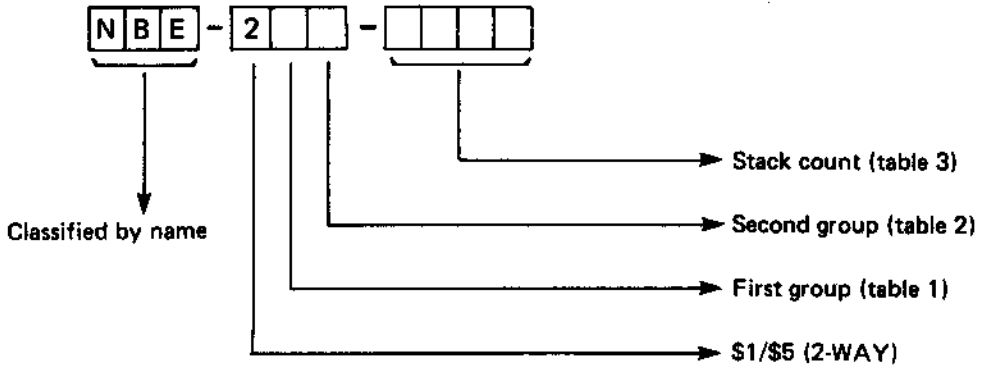

Table 1

Sign	Front mask						Power supply voltage (AC)	
	H						117V	27V
0	○						○	
1	○							○

Table 2

Sign	Single unit type	Separated type
None	○	
B		○

Table 3

Sign	Stack count
None	100
400	400

3. STRUCTURE AND MOVEMENT

3-1 MODULE AND COMPONENT LOCATION

NB-20 SERIES (The figure shows model NB-29A)

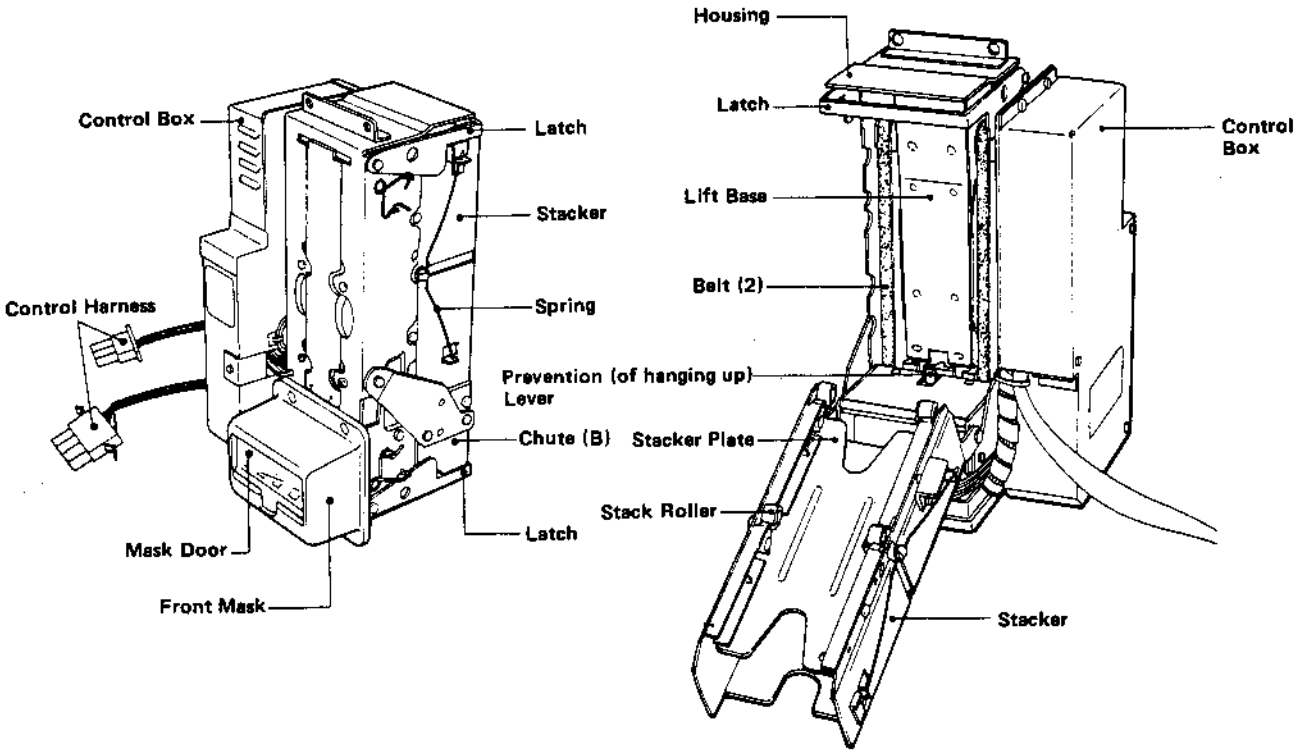

NBE-20 SERIES (The figure shows model NBE-20)

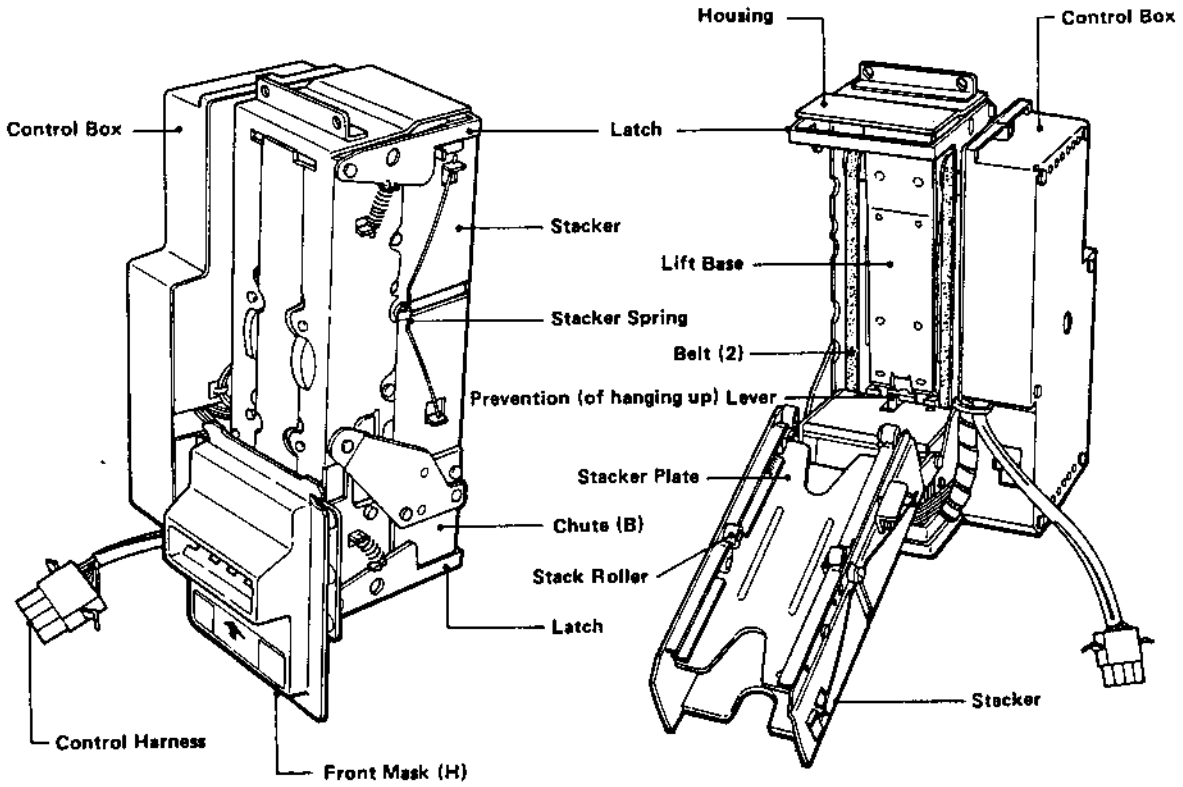

3-2 PASSAGE OF BILL AND EQUIPMENT OPERATION

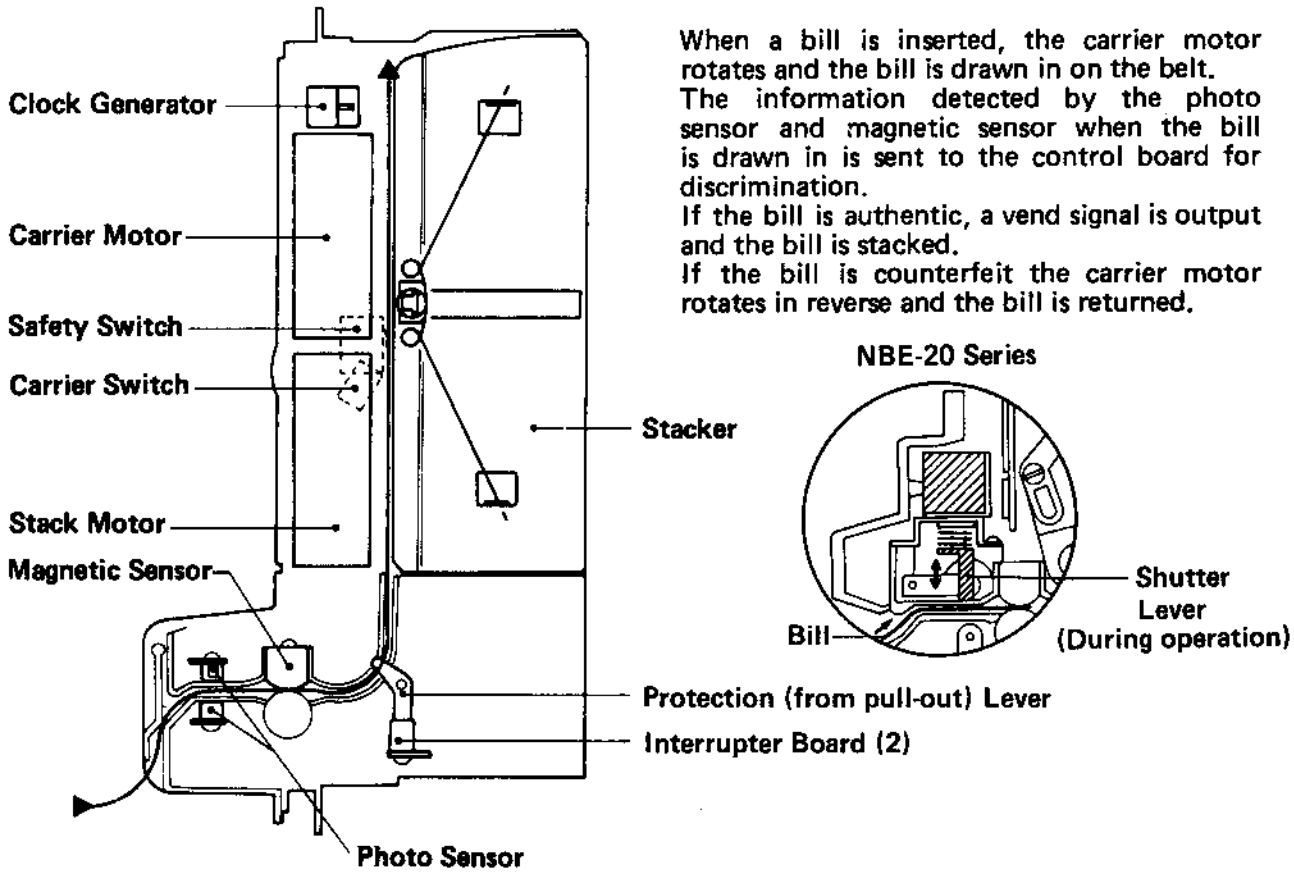

When a bill is inserted, the carrier motor rotates and the bill is drawn in on the belt.
The information detected by the photo sensor and magnetic sensor when the bill is drawn in is sent to the control board for discrimination.
If the bill is authentic, a vend signal is output and the bill is stacked.
If the bill is counterfeit the carrier motor rotates in reverse and the bill is returned.

3-3 STACKER OPERATION

When the stack motor rotates, the lift base is pressed by the lift lever and the bill is stacked between the stacker plate and stack guide.

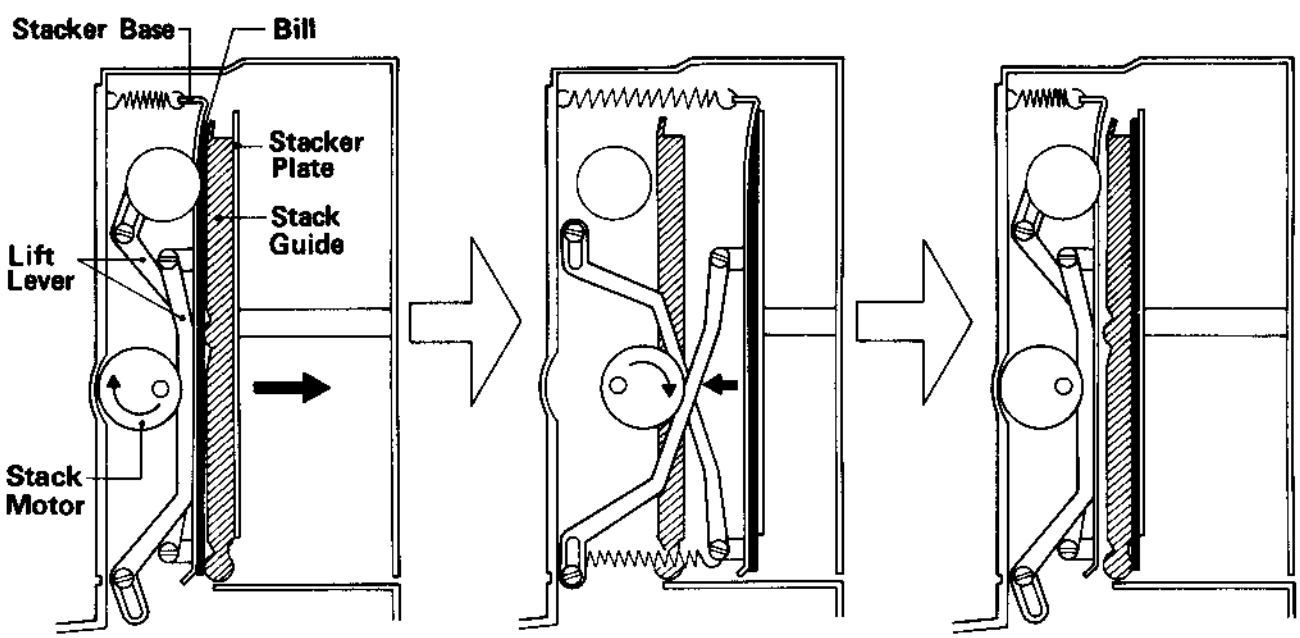

4. HOW TO USE

4-1 System Switch Settings (NBE-20 Series Only)

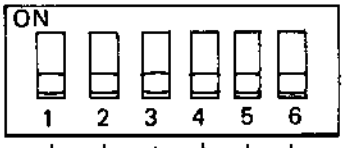

Interfacing with the vending machine control side can be set at the desired settings using by setting the system switches (6 P DIP switch) in the control board.

No.	Item	Off	On
1	Interface Type	• Serial Communication	• Low Level non Isolated • Isolated or Low Level
2	Interface Output	Low Level non Isolated (Note 1)	Isolated or Low Level (Note 2)
3	Pulse 1	Switch which sets the number of pulses/dollar	
4	Pulse 2		
5	Pulse 3		
6	Pulse Pattern (ON/OFF)	35 ms/300 ms	30 ms/50 ms

(Note 1) A single pulse is output from the credit line when a valid bill is inserted if DIP Switch 1 is ON and DIP switch 2 is OFF.

(Note 2) DIP Switches 3–6 are valid when DIP Switch 1 and DIP Switch 2 are ON, and the number of pulses per dollar and the pulse interval can be set.

No. of Pulses / Pulse Switch	1	2	3	4	5	6	7	8
Pulse 1	0	1	0	1	0	1	0	1
Pulse 2	0	0	1	1	0	0	1	1
Pulse 3	0	0	0	0	1	1	1	1

[Sets the number of pulses per 1 dollar]

The pulse switch is ON when it is 1.
The pulse switch is OFF when it is 0.

4-2 Installation and Connection (The figure shows model NB-29A)

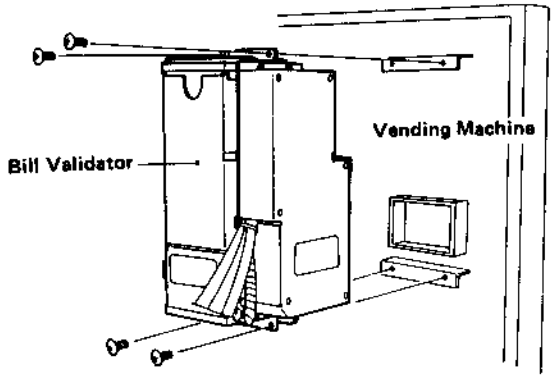

After installing this unit in an automatic vending machine, connect the connectors. Switch on the unit after connecting the power supply (AC 117 V).

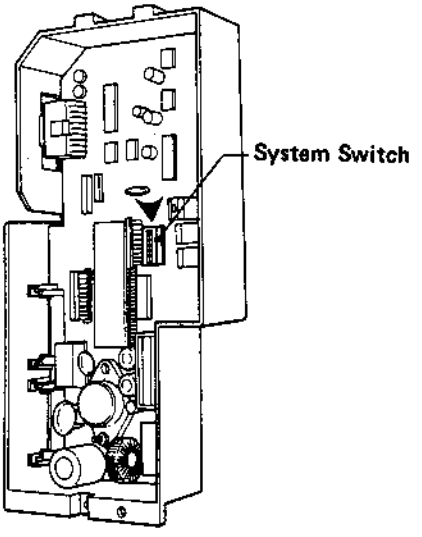

4-3 Inserting Bills (The figure shows model NB-29A)

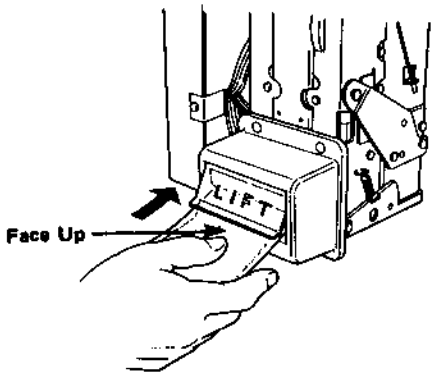

A $1 bill can be inserted face up lengthwise from either end.
A $5 bill can be inserted face up lengthwise from the end with the widest margin.
(NB-2A: Insert from the end with the $5 Display)

4-4 HOW TO WITHDRAW $1 OR $5 BILLS (The figure shows model NB-29A)

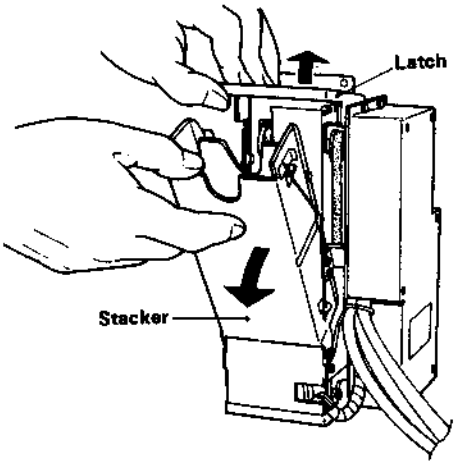

Push up the latch and pull down the stacker.

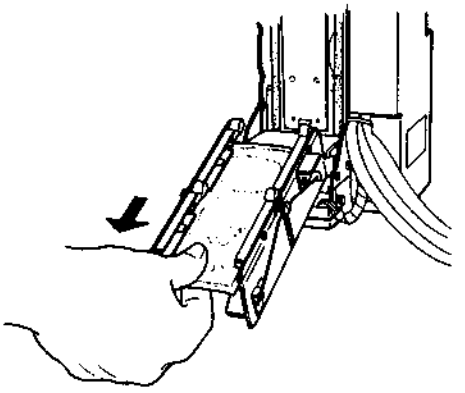

Take hold of the bills and pull them out. (Warning: Be sure to re-set stacker to original position.)

4-5 INSPECTION: If Authentic $1 or $5 bill will not Accept or is Reject after Insertion

(The figure shows model NB-29A)

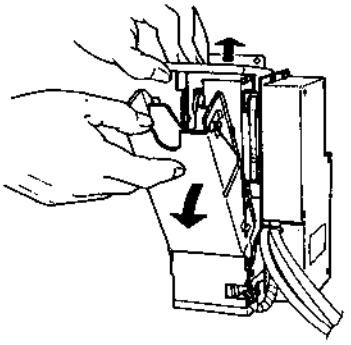

Push up the latch and pull down the stacker.
If full of bills, withdraw them.
Remove any bills or foreign matter clogging the stacker.

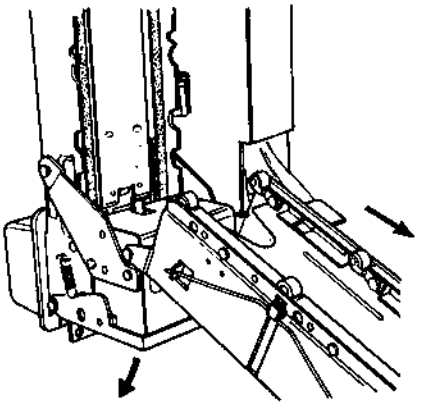

Press down the latch and pull up the stacker.

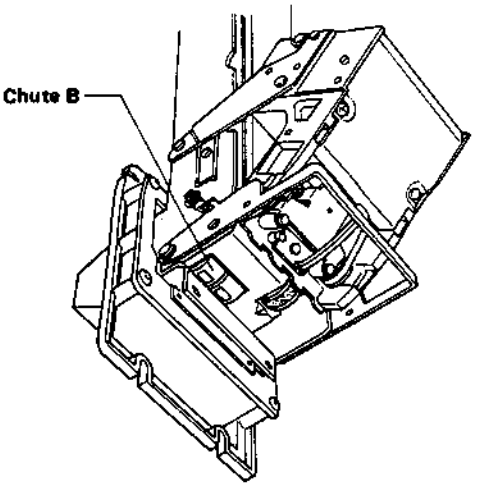

Remove any bills or foreign matter clogging the stacker.
Cut the power off and turn it on again.
(Warning: Be sure to return stacker to original position.)

If the bill validator still will not accept any bills, check the following.

- Are the stacker and the chute set securely?
- Is the photo sensor or are the magnetic heads dirty?
- Are the conditions in Additional Specifications 2 and 3 met?

5. OPERATION WARNING

5-1 HOW TO WITHDRAW $1 OR $5 BILLS (The figure shows model NB-29A.)

ELECTRIC POWER SOURCE

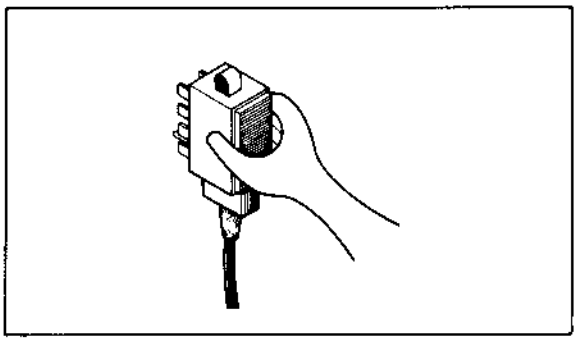

Use at AC 117 V ±10V. 60Hz.

KEEP FREE FROM DIRT AND RAIN-WATER

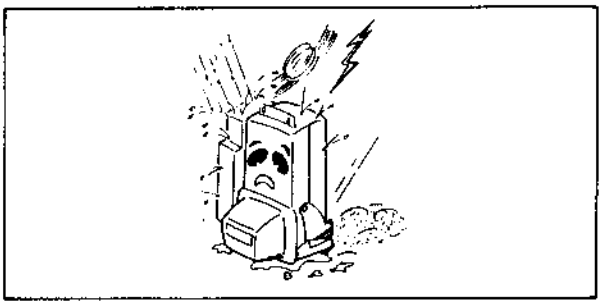

Exposure to dirt and rain will cause breakdown.

LATCH ENGAGEMENT

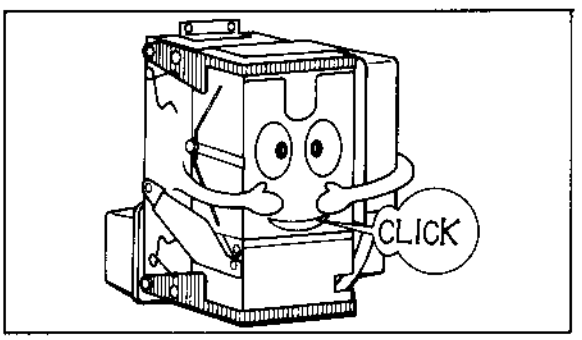

Push in the stacker firmly until it latches.

STORAGE

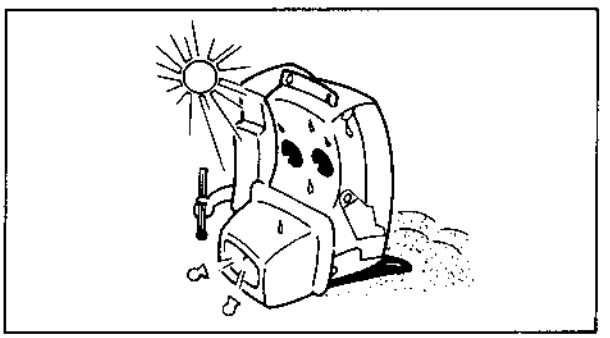

Do not place where exposed to extremes of heat, humidity, and dust.

DO NOT PULL OUT LIFT BASE

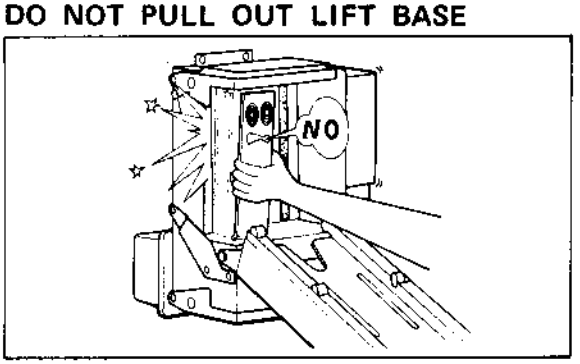

Please refrain from moving or pulling by hand.

DO NOT TAKE APART

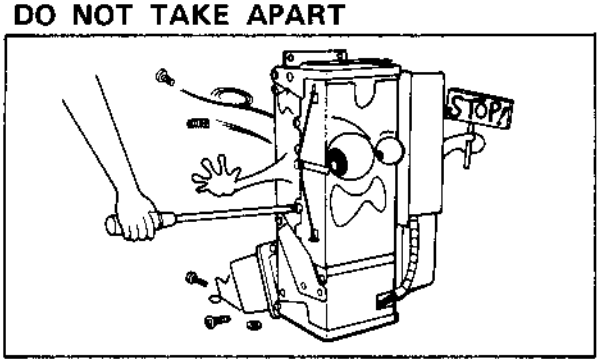

Taking apart will result in breakdown and we will be unable to guarantee its performance, so refrain from taking apart.

BILLS USED

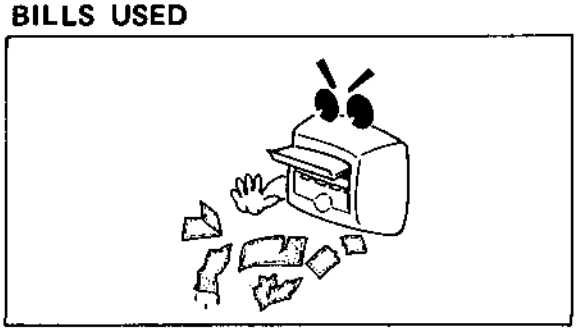

Be careful with wet, wrinkled and torn bills. Their use leads to jamming.

* SEQUENTIAL FLOW DIAGRAM
* INPUT/OUTPUT SIGNAL CONDITION (seen from Control Board)

* SEQUENTIAL FLOW DIAGRAM

Refer to TROUBLE-SHOOTING

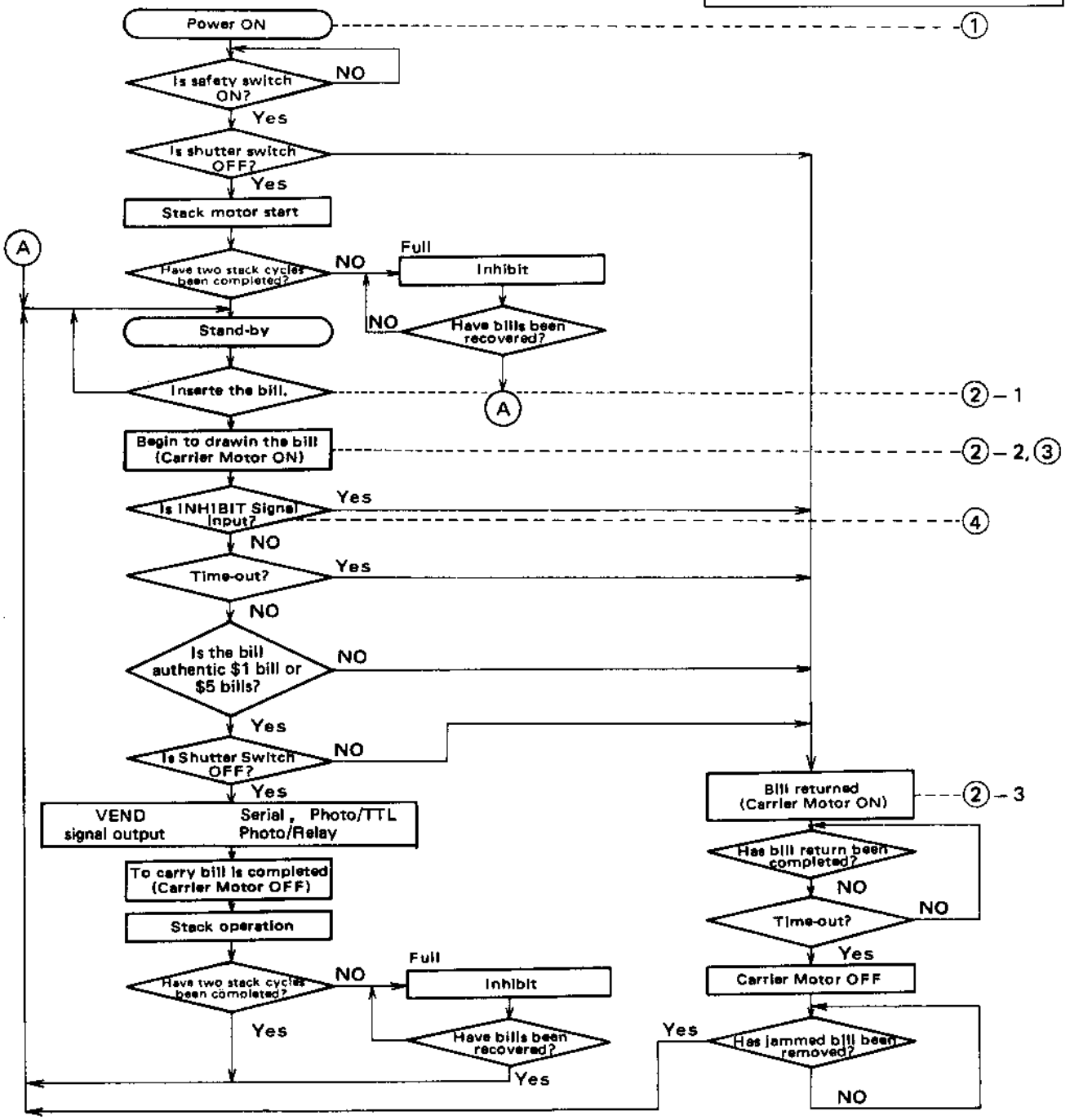

* INPUT/OUTPUT SIGNAL CONDITION (seen from Control Board)

(The figure shows model NB-20)

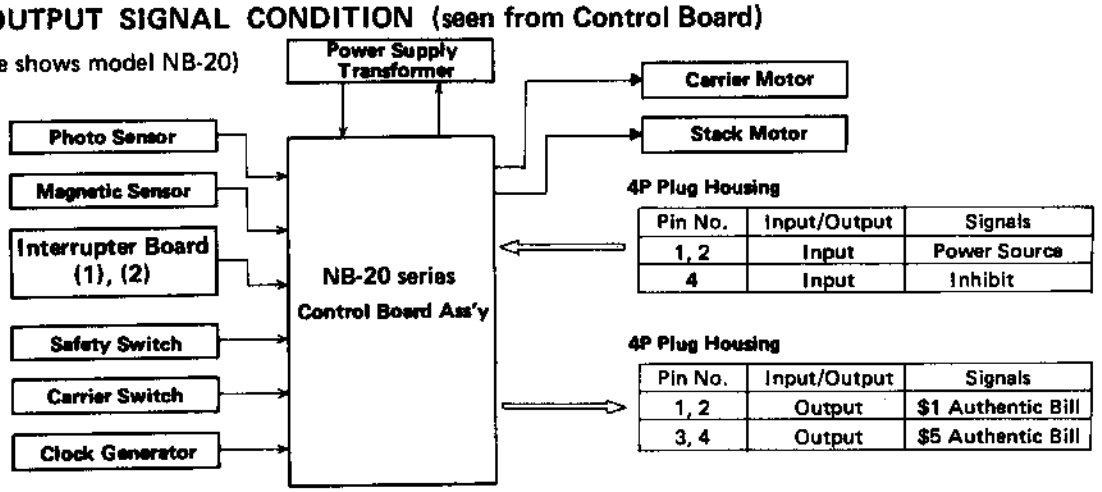

4P Plug Housing

Pin No.	Input/Output	Signals
1, 2	Input	Power Source
4	Input	Inhibit

4P Plug Housing

Pin No.	Input/Output	Signals
1, 2	Output	$1 Authentic Bill
3, 4	Output	$5 Authentic Bill

(The figure shows model NBE-20)

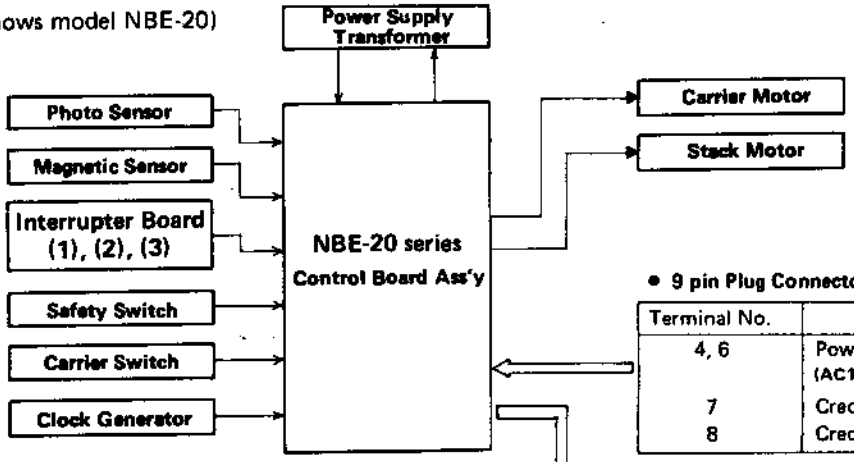

• 9 pin Plug Connector

Terminal No.	Signal Name	Input/Output
4, 6	Power Supply (AC117V ±10 60HZ)	Input
7	Credit Relay (NO)	Output
8	Credit Relay (COM)	Output

• 18 pin Interface Connector

Terminal No.	Signal Name	Input/Output	Terminal No.	Signal Name	Input/Output
1	1 Dollar Credit	Output	10	–	–
2	Allocation	Output	11	–	–
3	5 Dollar Credit	Output	12	Can Accept	Input
4	Power Supply (GND)	Input	13	–	–
5	Data	Output	14	Sent	Input
6	Escrow Return High	Input	15	Can Use 1 Dollar Low	Input
7	Can Use 5 Dollar High	Input	16	–	–
8	–	–	17	Can Use 5 Dollar Low	Input
9	Can Use 1 Dollar High	Input	18	Escrow Return Low	Input

6. SIGNALS AND TIMING CHARTS

6-1 NB-20 SERIES

MOLEX 4 Pin Plug Housing

Pin No.	Designation of signals	Input/Output	Conditions
1, 2	Power Source	Input	Usually AC 117 V ± 10 V supplying 60 Hz
4	"Inhibit" Signal	Input	Usually cut off. During "Inhibit" power is supply by the #2 pin power source of the 4 Pin Plug Housing.

AMP 4 Pin Plug Housing

Pin No.	Designation of signals	Input/Output	Conditions
1, 2	"$1 Authentic Bill" Signal	Output	When a signal is sent, the relays make contact for approx. 150 msec.
3, 4	"$5 Authentic Bill" Signal	Output	When a signal is sent, the relays make contact for approx. 150 msec.

9 Pin Connector (Option)

Pin No.	Designation of signals	Input/Output	Conditions
1, 4	Power Source	Output	Supplies a constant DC24V
3	Counter Signal	Output	Sends minus 24VDC from the power supply for 150 msec when an authentic bill signal is sent.
6	Full Signal	Output	Sends minus 24VDC from the power supply when the stacker is full.
2, 5, 7, 8, 9	NC	–	

Note: The input/output column conditions are with respect to the bill validator side.

6. SIGNALS AND TIMING CHARTS

6-1 NB-20 SERIES

• INPUT/OUTPUT CIRCUIT

1 Counter Signal and Full Signal Terminal

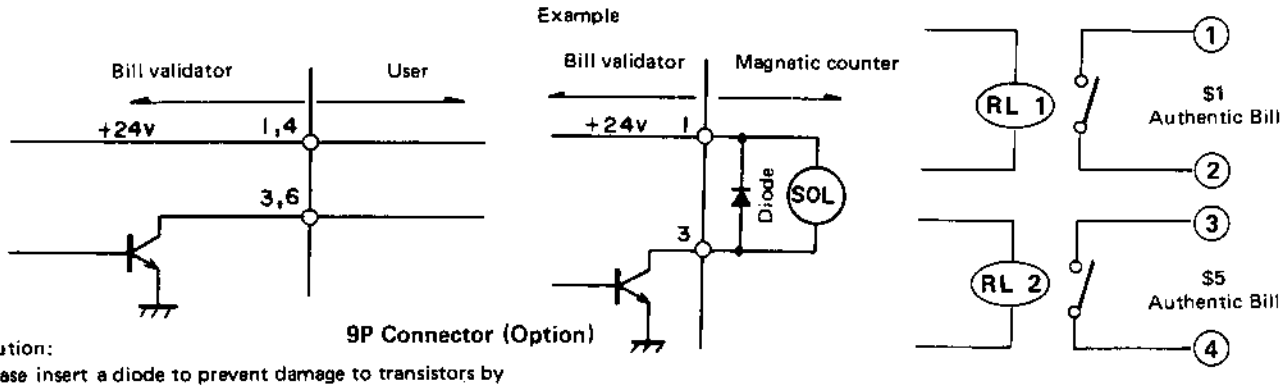

Caution:
Please insert a diode to prevent damage to transistors by a counter electromotive force when attachments such as the magnetic counter are made (see right diagram).

• TIMING CHART

1. Normal mode of operation

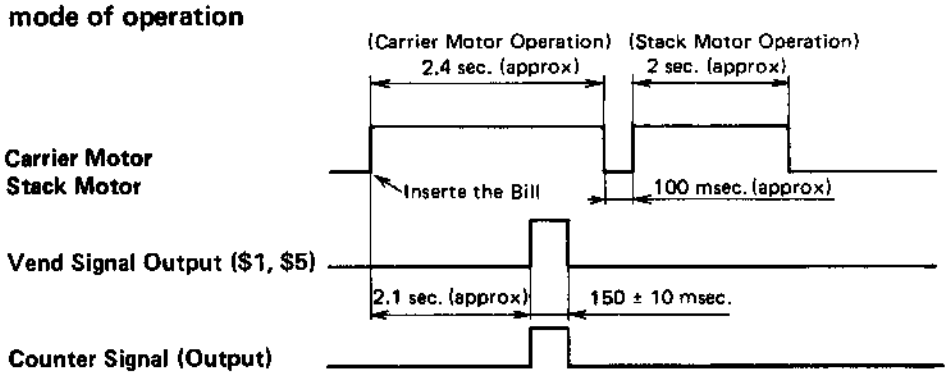

2. Abnormal mode of operation

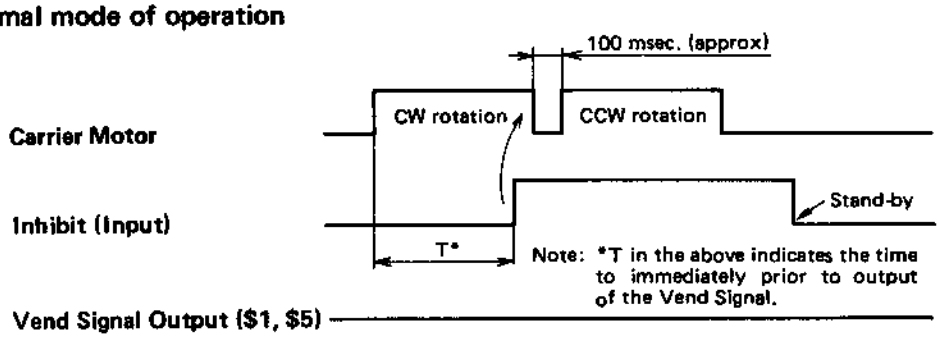

3. When the stacker is full

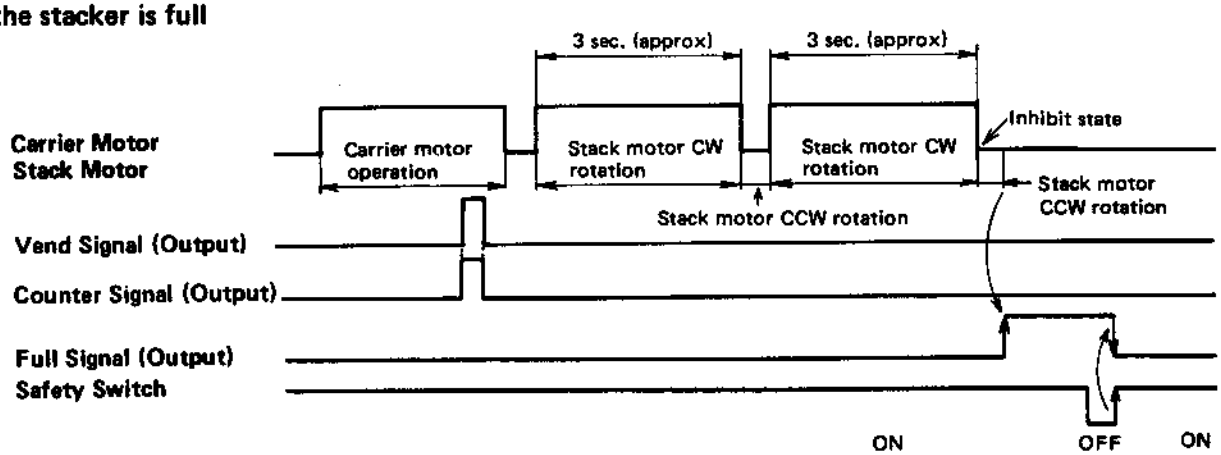

6-2 NBE-20 SERIES

1. 9 pin Plug Connector

NBE-20 Series

Terminal No.	Signal Name	Input/Output	Signal Conditions
4, 6	Power Supply (AC117V ± 10 60Hz)	Input	Constant AC117V ± 10V 60Hz power supply.
7	Credit Relay (NO)	Output	Output from credit relay NO terminal.
8	Credit Relay (COM)	Output	Output from credit relay COM terminal.

NBE-21 Series

Terminal No.	Signal Name	Input/Output	Signal Conditions
5,6	Power Supply (AC 27V ±3V 60Hz)	Input	Constant AC 27V ± 3V 60Hz power supply.
7	Credit Relay (NO)	Output	Output from credit relay NO terminal.
8	Credit Relay (COM)	Output	Output from credit relay COM terminal.

- The credit relay output circuits of the #7 and #8 terminals are as follows:

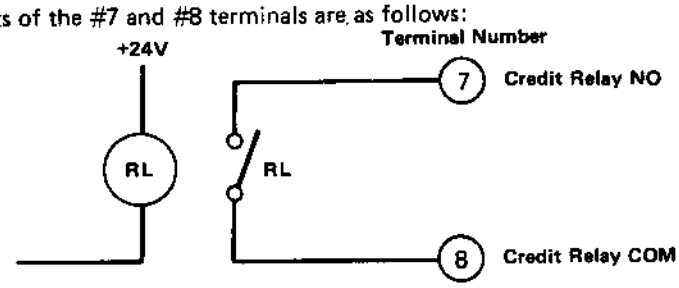

2. 18P Interface Connector

(AMP type: 0-87579-6)

Terminal No.	Signal Name	Input/Output	Signal Conditions
1	1 Dollar Credit	Output	With the photocoupler and TTL (system switch: 1–ON; 2–OFF) machine, when a 1 dollar bill is recognized as authentic, it transmits an "L" signal for 150msec. When the #18 terminal escrow return Low signal is an "L" signal, the 1 dollar bill is accepted and another 150msec. "L" signal is output.
2	Allocation	Output	With the serial transmission (system switch: 1–OFF) machine, when status word transmit preparations are complete, an "L" signal is transmitted. When the #14 terminal "output signal" restarts within 4 seconds, an "L" signal will be continuously output. Termination of this signal will occur when the #14 terminal "output signal" supply becomes an "H" signal.
3	5 Dollar Credit	Output	With the photocoupler and TTL (system switch: 1–ON; 2–OFF) machine, when a 5 dollar bill is recognized as authentic, it transmits an "L" signal for 150msec. When the #18 terminal escrow return Low signal is an "L" signal, the 5 dollar bill is accepted and another 150msec. "L" signal is output.
4	5 Dollar Credit	Input	(Machine control side preparation ground)
5	Data	Output	With the serial transmission (system switch 1: OFF), when the #14 terminal "output signal" is an "L" signal, an 8 bit status message is transmitted in NRZ format. When the "output signal" is restarted, the status word is transmitted once again.

Terminal No.	Signal Name	Input/Output	Signal Conditions
6	Escrow Return HIGH	Input	With the photocoupler and TTL (system switch 1–ON; 2–OFF) and photocoupler and relay (system switch 1–ON; 2–ON) machines DC5V~12V positive power is supplied.
7	Can Use 5 Dollar HIGH	Input	With the photocoupler and TTL (system switch 1–ON; 2–OFF) and photocoupler and relay (system switch 1–ON; 2–ON) machines, DC5V~12V positive power is supplied.
8	–	–	–
9	Can Use 1 Dollar HIGH	Input	With the photocoupler and TTL (system switch 1–ON; 2–OFF); photocoupler and relay (system switch 1–ON; 2–ON) machines, DC5V~12V positive power is supplied.
10	–	–	–
11	–	–	–
12	Can Accept	Input	With the serial transmission (system switch 1: OFF) machine, when an "L" signal is supplied, acceptance of the bill is enabled. In the bill acceptance escrow status, after the #14 terminal "output signal" ("H") is output, when the "acceptance enable signal" remains "L", the bill will be accepted and a bill acceptance data message will be transmitted. When the #14 terminal "output signal" ("H") is output, the #2 terminal "Allocation signal" becomes "H" and within 5msec. the "accept enable signal" "H" is supplied. The bill is returned and a bill return data message is transmitted.
13	–	–	–
14	Sent	Input	With the serial transmission (system switch: 1–OFF) machine, after the output by terminal #2 of an "interrupt signal" and "L" signal is supplied, and a status message is transmitted from the #5 terminal "data signal." During the 2–4msec. continuous transmission of the signal, an "H" signal is supplied. The bill is accepted and the "L" is maintained in the escrow status "transmit signal."
15	Can Use 1 Dollar LOW	Input	With the photocoupler and TTL (system switch 1–ON; 2–OFF) and photocoupler and relay (system switch 1–ON; 2–ON) machines, when an "L" signal is supplied, 1 dollar bill acceptance is enabled. When the #18 terminal "escrow return LOW signal" is supplied with an "L" signal and the 1 dollar bill is accepted, the 1 dollar bill is placed in escrow by changing the "1 dollar bill capability LOW signal" to "H."

Terminal No.	Signal Name	Input/Output	Signal Conditions
			When a 1 dollar bill is inserted and escrow status "1 dollar bill capability LOW signal" becomes "L", the 1 dollar bill is accepted by the machine and the interface: —Photocoupler and TTL— Terminal #1 "1 dollar credit signal" is output for 150msec. —Photocoupler and relay— The credit relay goes ON or OFF according to the system switch setting. In escrow status, the 1 dollar bill is returned by changing the #18 terminal "escrow return LOW signal" to "H" for more than 20msec.
16	—	—	—
17	Can Use 5 Dollar LOW	Input	With the photocoupler and TTL (system switch 1—ON: 2—OFF) and photocoupler and relay (system switch 1—ON; 2—ON) machines, when an "L" signal is supplied, 5 dollar bill acceptance is enabled. When the #18 terminal "escrow return LOW signal" is supplied with an "L" signal and the 5 dollar bill is accepted, the 5 dollar bill is placed in escrow by changing the "5 dollar bill capability LOW signal" to "H." When a 5 dollar bill is inserted and escrow status "5 dollar bill capability LOW signal" becomes "L", the 5 dollar bill is accepted by the machine and the interface: —Photocoupler and TTL— Terminal #3 "5 dollar credit signal" is output for 150msec. —Photocoupler and relay— The credit relay goes ON or OFF according to the system switch setting. In escrow status, the 5 dollar bill is returned by changing the #18 terminal "escrow return LOW signal" to "H" for more than 20msec.
18	Escrow Return LOW	Input	With the photocoupler and TTL (system switch 1—ON: 2—OFF) and photocoupler and relay (system switch 1—ON; 2—ON) machines, an "L" signal is supplied when the inserted bill is placed in escrow status. When, in escrow status, the bill is returned, an "H" signal is supplied for more than 20msec.

Note: The input/output column conditions are with respect to the bill validator side.

3 Input/Output Circuit

18P Interface Connector Input Circuit

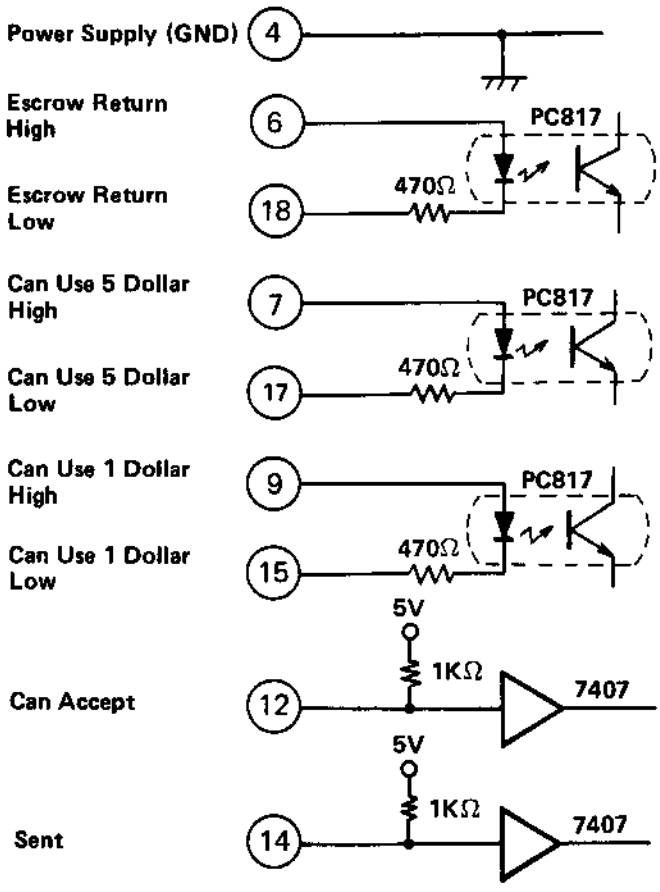

18P Interface Connector Output Circuit

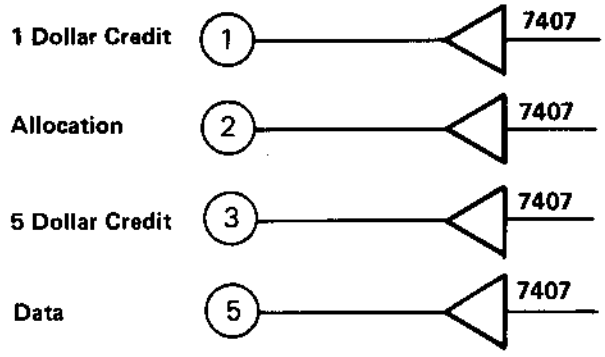

4 Serial Transmission Data

The bill validator transmits a status message to the vendor controller to relate the status of the bill denomination, its handling and of the bill validator itself (refer to status messages).

This status message is transmitted to the vendor controller in NRZ (non-return to zero recording) synchronization.

The transmission format is as follows:

Data is transmitted a frame at a time from the terminal #18 "data signal" of the 18P interface connector. Transmission rate is 600 BPS.

STOP Bit	7 Bit	6 Bit	5 Bit	4 Bit	3 Bit	2 Bit	1 Bit	0 Bit	START Bit

8 bits of data

Start bit = 0
Stop bit = 1

● Status messages

Status messages are as indicated below:

Bit / Status message	7	6	5	4	3	2	1	0
1 dollar credit	1	0	0	0	0	0	0	1
5 dollar credit	1	0	0	0	0	0	1	1
Acceptance	1	0	0	0	1	0	0	1
Return	1	0	0	0	1	0	1	0
Stacker full	1	0	0	0	1	1	0	1

5 Timing Chart

(5-1) Serial communication (system switch 1–OFF)

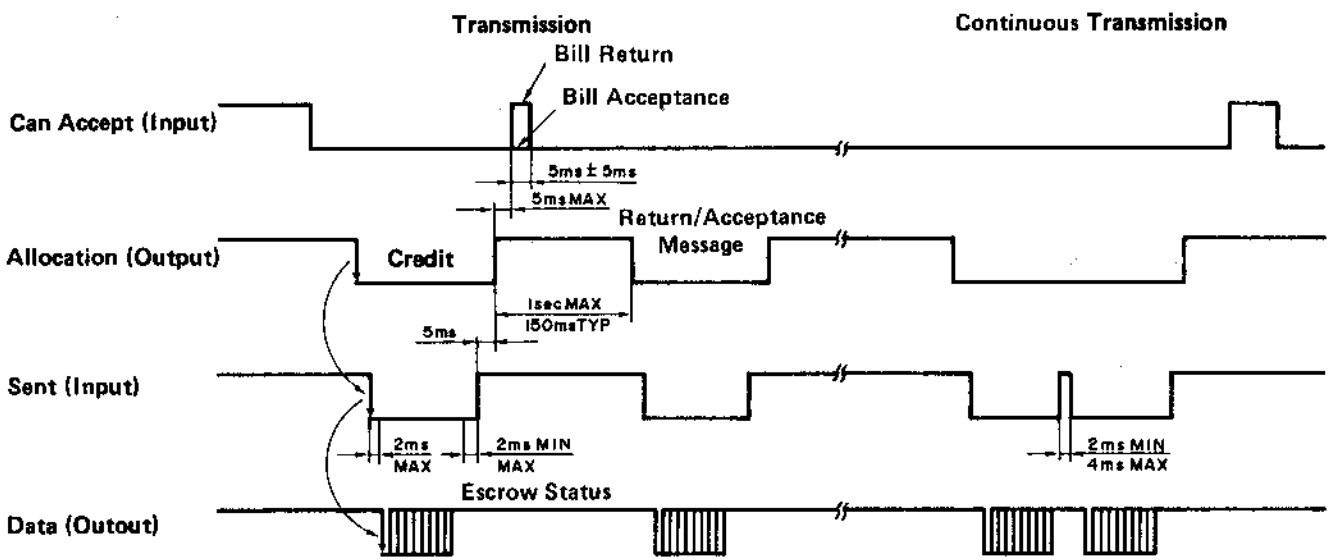

6. SIGNALS AND TIMING CHARTS

6-2 NBE-20 SERIES

5-2 Low Level non Isolated (system switches 1–ON, 2–OFF)

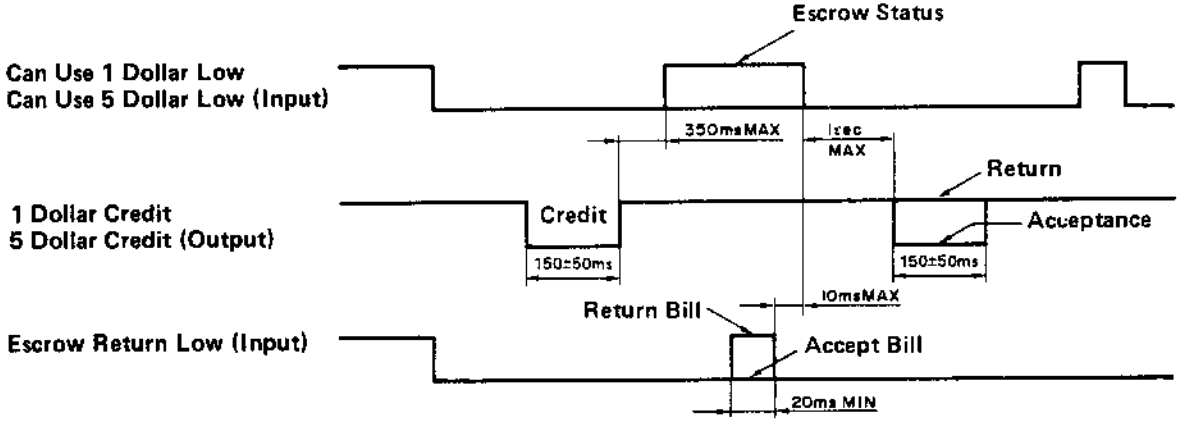

5-3 Isolated or Low Level (system switches 1–ON, 2–ON)

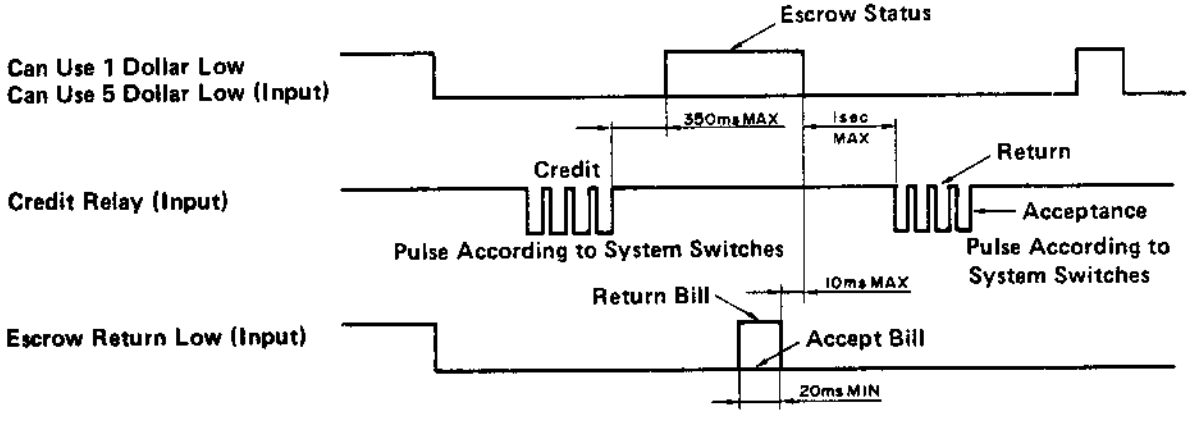

* VOLTAGE MEASUREMENT

(1) AC voltage measurement

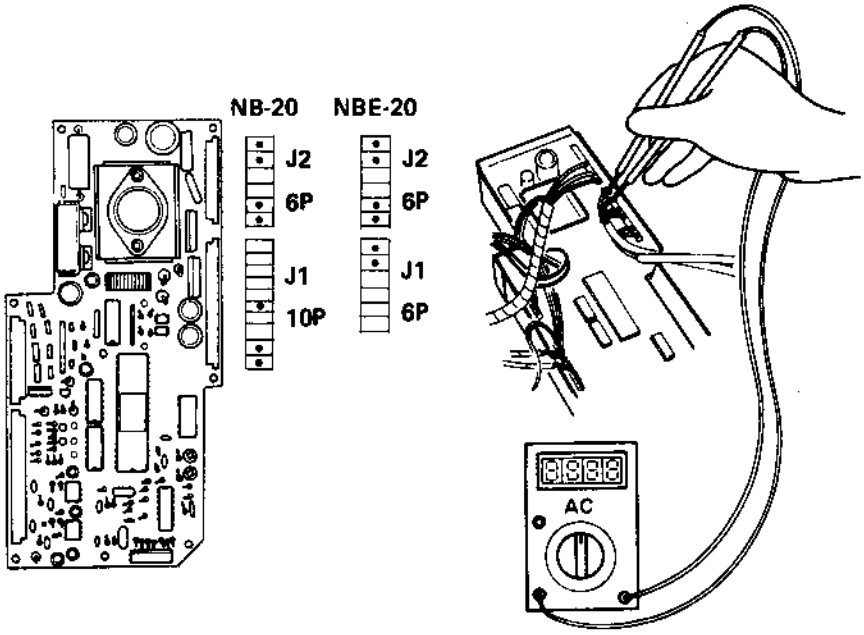

Attach the probes as shown at left when measuring AC voltage.

(2) DC voltage measurement

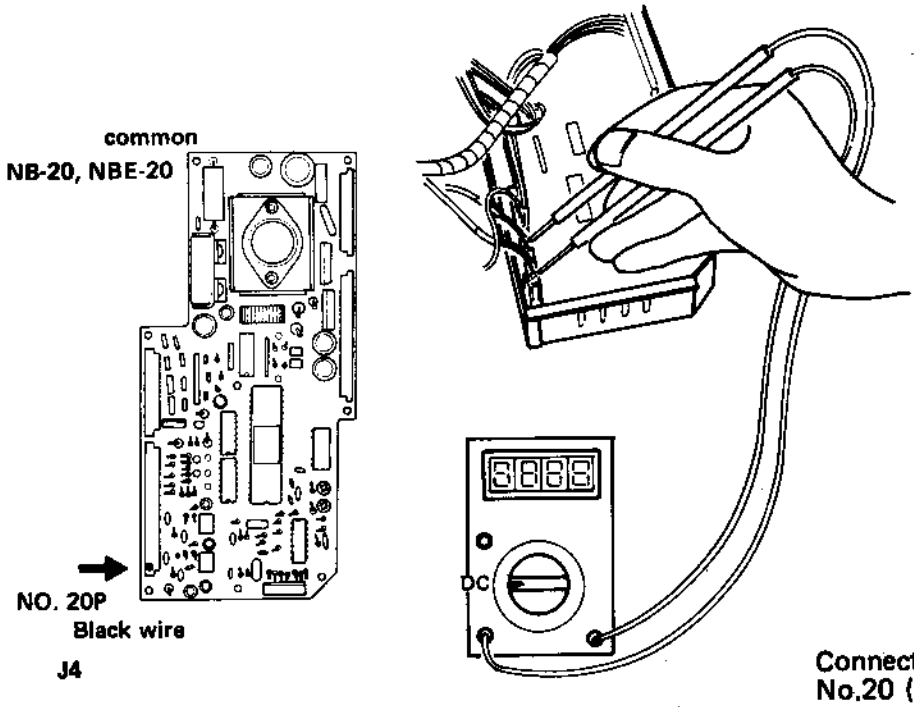

Connect the (–) probe to Pin No.20 (black wire) of the 20p module connector and touch the (+) probe to the location to be measured.

7. SIGNALS OF CONNECTOR AND WIRING DIAGRAM

7-1 SIGNALS (NB-20 SERIES)

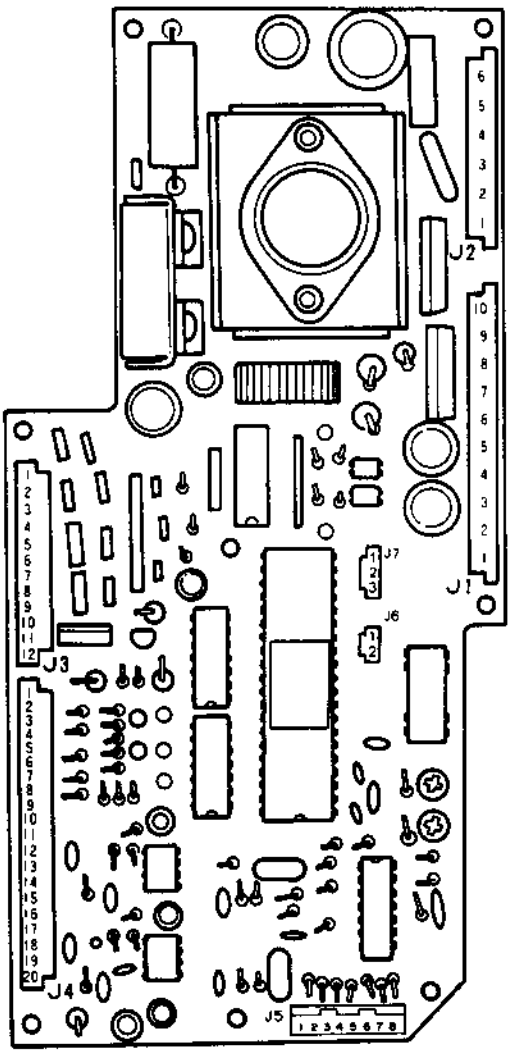

J2 6p post:

Pin No.	Wire color	Signal	Input and output as seen from the logic board	Phase	Voltage at stand-by position (V)	Voltage during operation (V)
1	Blue	Power supply transformer (primary)	Output	1	A C 117	A C 117
2	Red		Output	2	A C 117	A C 117
3	—	—	—	—	—	—
4	—	—	—	—	—	—
5	White	Power supply transformer (secondary)	Input	—	A C 34	A C 34
6	Black			—	A C 34	A C 34

J3 12p post

Pin No.	Wire color	Signal	Input and output as seen from the logic board	Voltage at stand-by position (V)	Voltage during operation (V)
1	White	Carrier motor (CW rotation)	Output	0	24 (approx)
2	Blue	Carrier motor (CCW rotation)	Output	0	24 (approx)
3	—	—	—	—	—
4	—	—	—	—	—
5	White/blue	Stack motor (CW rotation)	Output	0	24 (approx)
6	Gray	Stack motor (CCW rotation)	Output	0	24 (approx)
7	Yellow	Photo-board (1) (LED)	Output	20 (approx)	20 (approx)
8	Green	〃 〃	Output	19 (approx)	19 (approx)
9	Gray	Interrupter board (1) LED	Output	20 (approx)	20 (approx)
10	Red	〃 LED	Output	19 (approx)	19 (approx)
11	Light blue	〃 detect	Output	5 (approx)	5 (approx)
12	White/red	〃 detect	Input	0	4 (approx)

J4 20p post

Pin No.	Wire color	Signal	Input and output as seen from the logic board	Voltage at stand-by position (V)	Voltage during operation (V)
1	Orange	Interrupter board (2) (clock generator)	Output	19 (approx)	19 (approx)
2	Green	〃 〃	Output	18 (approx)	18 (approx)
3	Purple	5VDC power supply	Output	5 (approx)	5 (approx)
4	Yellow	Interrupter board (clock generator)	Input	5	⎍ 5 0
5	White	Photo board (2) (detect)	Output	16 (approx)	17 (approx)
6	Red	Photo-board (2)	Input	16 (approx)	16
7	Black	〃	Input	16	16
8	White/red	0VDC power supply	Output	0	0
9	Purple	Carrier switch	Input	0	5 (approx)
10			—		
11	Black	0VDC power supply	Output	0	0
12	Pink	Safety switch	Input	0	5 (approx)
13	—		—		
14	White	Magnetic head H1 (magnetic sensor)	Input	6 (approx)	6 (approx)
15	Red	〃 〃	Input	5 (approx)	5 (approx)
16	Black	0VDC power supply	Output	0	0
17	—		—		
18	White	Magnetic head H2 (magnetic sensor)	Input	6 (approx)	6 (approx)
19	Red	〃 〃	Input	5 (approx)	5 (approx)
20	Black	0VDC power supply	Output	0	0

J1 10p post

Pin No.	Wire color	Signal	Input and output as seen from the logic board	Phase	Voltage at stand-by position (V)	Voltage during operation (V)
1	Yellow	$5 Authentic Bill signal	Output		Relay contacts closed for 150msec (approx) at signal output.	
2	Pink					
3	Black	$1 Authentic Bill signal	Output		Relay contacts closed for 150msec (approx) at signal output.	
4	White					
5	—	—	—	—	—	—
6	Purple	INHIBIT signal	Input	2	0	AC 117
7	—	—	—	—	—	—
8	—	—	—	—	—	—
9	Red	Power supply	Input	1	AC 117	AC 117
10	Blue			2	AC 117	AC 117

J7 3p post

Pin No.	Wire color	Signal	Input and output as seen from the logic board	Voltage at stand-by position (V)	Voltage during operation (V)
1	Red	Power supply (+24V)	Output	DC24	DC24
2	—	—	—		
3	Blue	Counter signal	Output	DC24	0

J6 2p post

Pin No.	Wire color	Signal	Input and output as seen from the logic board	Voltage at stand-by position (V)	Voltage during operation (V)
1	Brown	Power supply (+24V)	Output	DC24	DC24
2	Yellow	Full signal	Output	DC24	0

7-2 WIRING DIAGRAM (NB-20 SERIES)

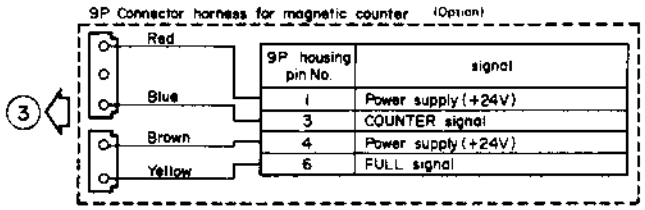

9P housing pin No.	signal
1	Power supply (+24V)
3	COUNTER signal
4	Power supply (+24V)
6	FULL signal

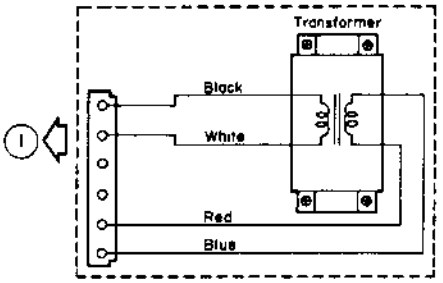

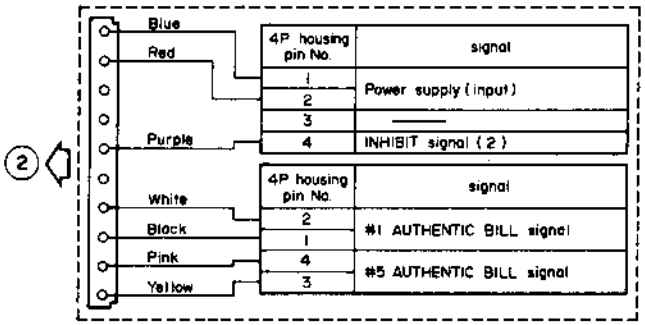

4P housing pin No.	signal
1	Power supply (input)
2	
3	——
4	INHIBIT signal (2)

4P housing pin No.	signal
2	#1 AUTHENTIC BILL signal
1	
4	#5 AUTHENTIC BILL signal
3	

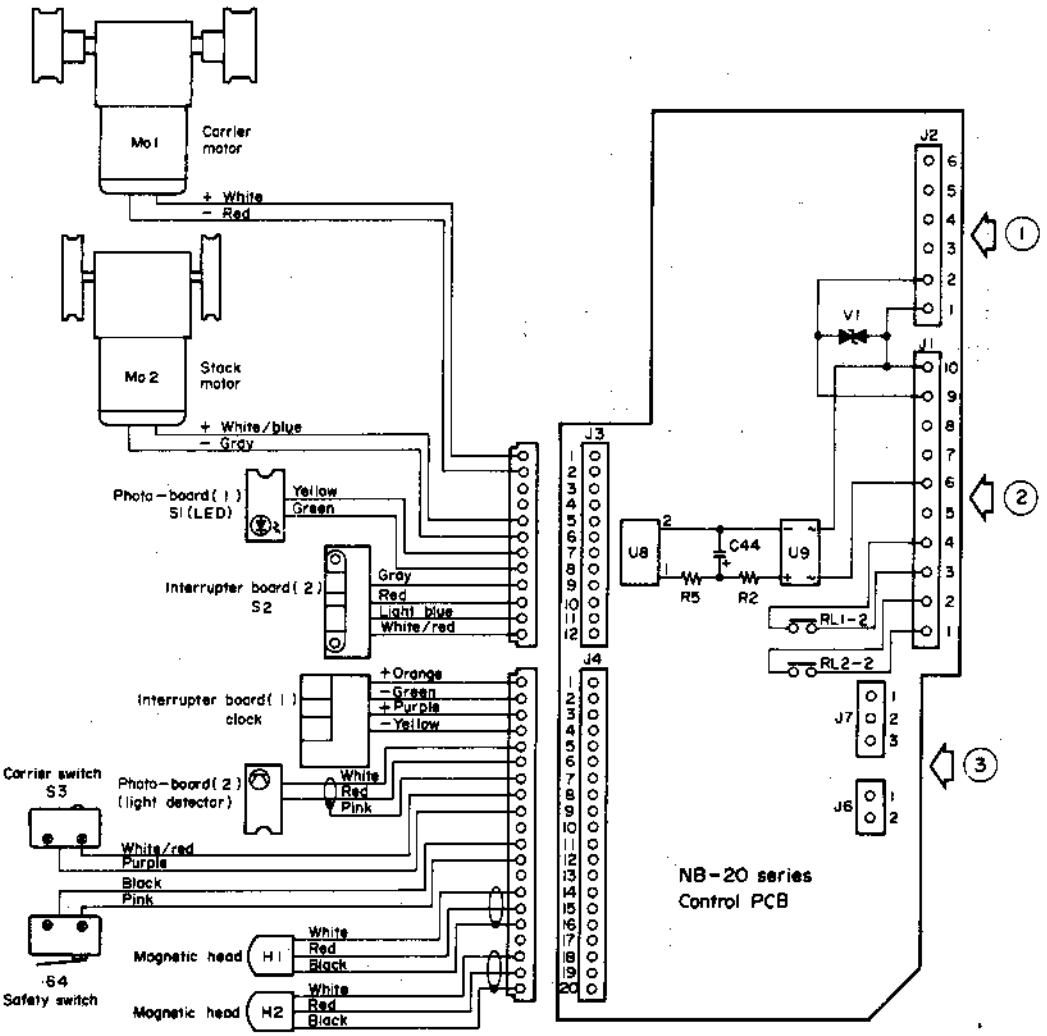

7-3 SIGNALS (NBE-20 SERIES)

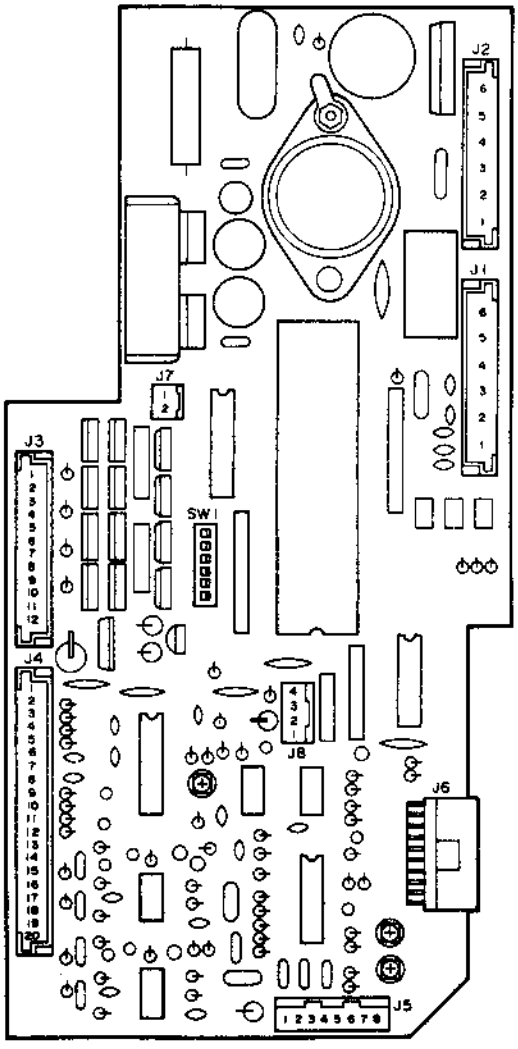

J2 6p post:

Pin No.	Wire color	Signal	Input and output as seen from the logic board	Phase	Voltage at stand-by position (V)	Voltage during operation (V)
1	Blue	Power supply transformer (primary)	Output	1	AC 117	AC 117
2	Red		Output	2	AC 117	AC 117
3	—	—	—	—	—	—
4	—	—	—	—	—	—
5	White	Power supply transformer (secondary)	Input	—	AC 34	AC 34
6	Black			—	AC 34	AC 34

J3 12p post

Pin No.	Wire color	Signal	Input and output as seen from the logic board	Voltage at stand-by position (V)	Voltage during operation (V)
1	White	Carrier motor (CW rotation)	Output	0	24 (approx)
2	Blue	Carrier motor (CCW rotation)	Output	0	24 (approx)
3	—	—	—	—	—
4	—	—	—	—	—
5	White/blue	Stack motor (CW rotation)	Output	0	24 (approx)
6	Gray	Stack motor (CCW rotation)	Output	0	24 (approx)
7	Yellow	Photo-board (1) (LED)	Output	20 (approx)	20 (approx)
8	Green	" "	Output	19 (approx)	19 (approx)
9	Gray	Interrupter board (1) LED	Output	20 (approx)	20 (approx)
10	Red	" LED	Output	19 (approx)	19 (approx)
11	Light blue	" detect	Output	5 (approx)	5 (approx)
12	White/red	" detect	Input	0	4 (approx)

J4 20p post

Pin No	Wire color	Signal	Input and output as seen from the logic board	Voltage at stand-by position (V)	Voltage during operation (V)
1	Orange	Interrupter board (2) (clock generator)	Output	19 (approx)	19 (approx)
2	Green	" "	Output	18 (approx)	18 (approx)
3	Purple	5VDC power supply	Output	5 (approx)	5 (approx)
4	Yellow	Interrupter board (clock generator)	Input	5	⎍ 5 0
5	White	Photo board (2) (detect)	Output	17 (approx)	17 (approx)
6	Red	Photo-board (2)	Input	16 (approx)	16
7	Black	"	Input	16	16
8	White/red	0VDC power supply	Output	0	0
9	Purple	Carrier switch	Input	0	5 (approx)
10	—	—	—	—	—
11	Black	0VDC power supply	Output	0	0
12	Pink	Safety switch	Input	0	5 (approx)
13	—	—	—	—	—
14	White	Magnetic head H1 (magnetic sensor)	Input	6 (approx)	6 (approx)
15	Red	" "	Input	5 (approx)	6 (approx)
16	Black	0VDC power supply	Output	0	0
17	—	—	—	—	—
18	White	Magnetic head H2 (magnetic sensor)	Input	6 (approx)	6 (approx)
19	Red	" "	Input	5 (approx)	5 (approx)
20	Black	0VDC power supply	Output	0	0

J1 10p post

Pin No.	Wire color	Signal	Input and output as seen from the logic board	Phase	Voltage at stand-by position (V)	Voltage during operation (V)
1	Blue	Power supply	Input	1	AC 117	AC 117
2	Red	Power supply	Input	2	AC 117	AC 117
3	—	—	—		—	—
4	Green	Credit Relay (NO)	Output		—	—
5	Yellow	" (COM)	Output		—	—
6	—	—	—		—	—

J8 4p post

Pin No	Wire color	Signal	Input and output as seen from the logic board	Voltage at stand-by position (V)	Voltage during operation (V)
1	Brown	Interrupter Board (3) LED	Output	18	18
2	Red	" LED	Output	17	17
3	Orange	" detect	Output	5	5
4	Yellow	" detect	Input	0	4

J7 2p post

Pin No.	Wire color	Signal	Input and output as seen from the logic board	Voltage at stand-by position (V)	Voltage during operation (V)
1	Brown	Power supply (+24V)	Output	DC24	DC24
2	Red	Shutter solenoids	Output	DC24	0

7-4 WIRING DIAGRAM (NBE-20 SERIES)

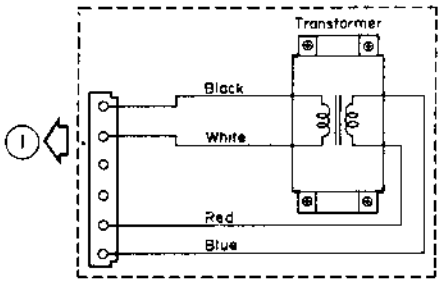

18 pin Interface Connector

Pin No.	signal
1	1 Dollar credit
2	Allocation
3	5 Dollar credit
4	Power supply (GND)
5	Data
6	Escrow return high
7	Can use 5 dollar high
8	——
9	Can use 1 dollar high
10	——
11	——
12	Can accept
13	——
14	Sent
15	Can use 1 dollar low
16	
17	Can use 5 dollar low
18	Escrow return low

③

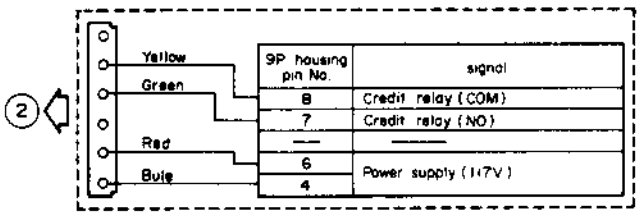

9P housing pin No.	signal
8	Credit relay (COM)
7	Credit relay (NO)
——	——
6	Power supply (117V)
4	

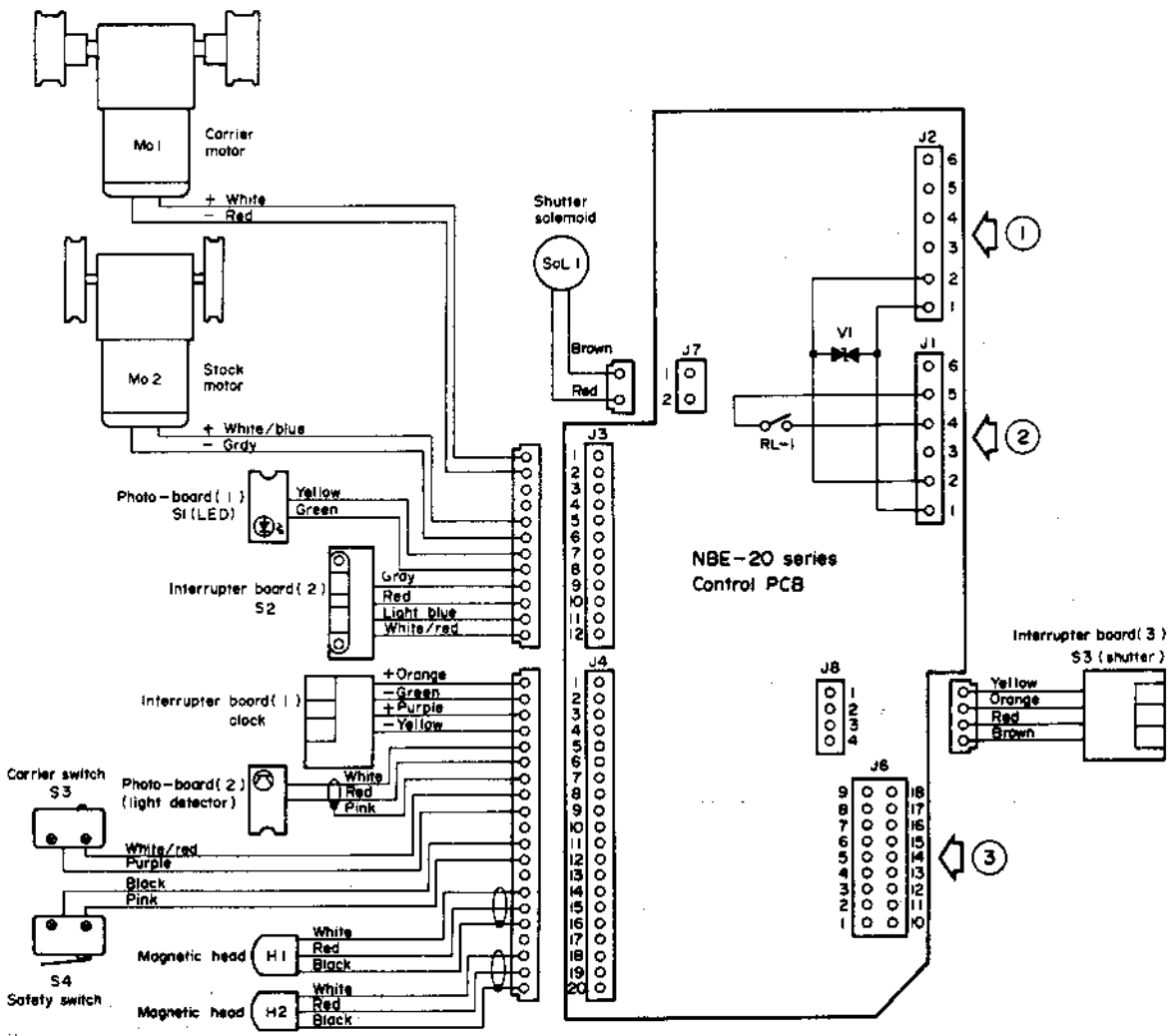

8. CLEANING (The figure shows model NB-29A.)

If the moving parts become dirty, get wet, or are stuck with foreign particles, proper operation cannot be maintained. Clean according to the requirements of the situation.

(The figure shows model NB-29A.)

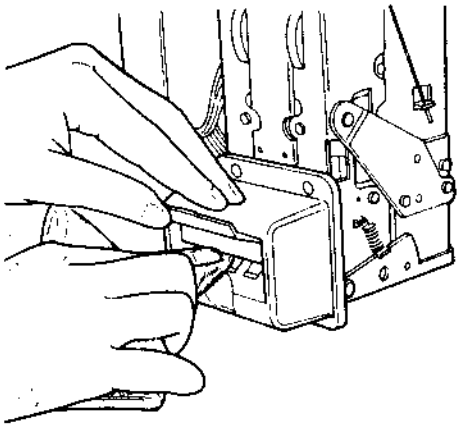

Wipe Bill Insertion Opening with a soft cloth.

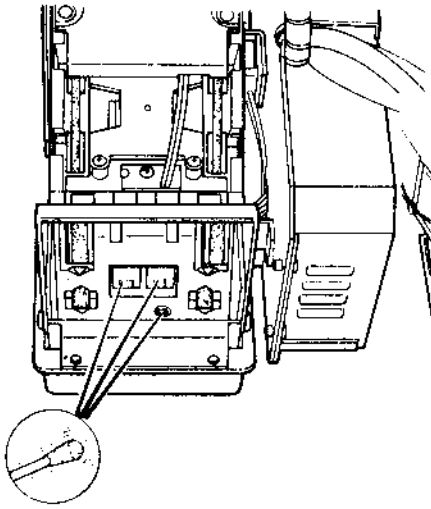

Clean the photo-sensor and magnetic heads with an applicator.

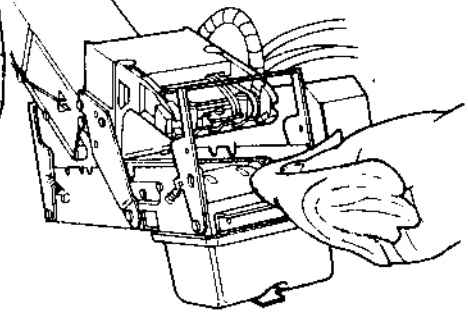

Wipe clean the chute roller, and belt with a soft cloth.

Clean the belt and the rubber roller with a cotton swab moistened with alcohol.

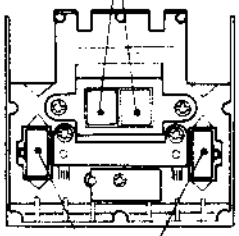

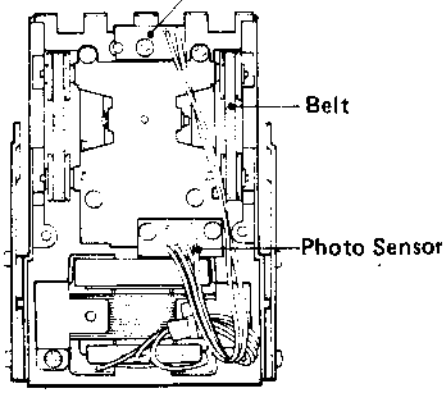

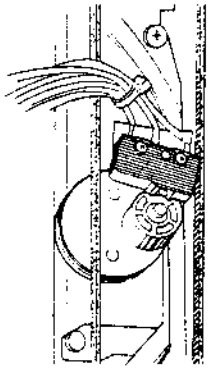

- **Carrier cam and switch**
  Confirm the operation condition of carrier cam and switch.

9. INSPECTION (The figure shows model NB-29A and NBE-20.)

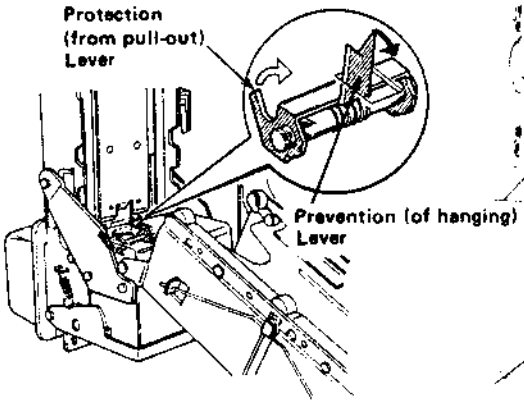

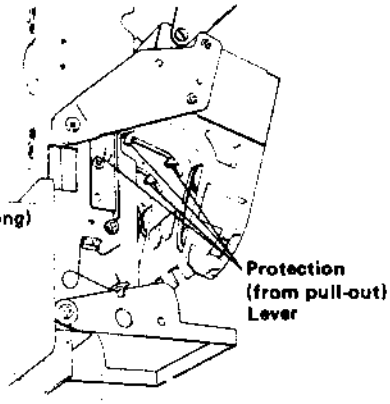

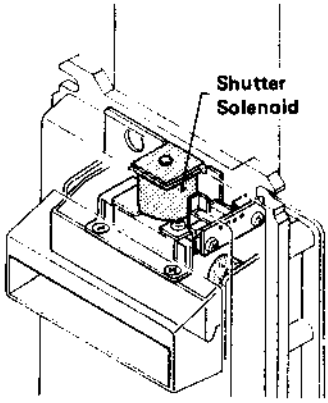

Prevention (of hanging) Lever
It should pull out easily and when released, return smoothly without sticking.

Protection (from pull-out) Lever
It should push easily, and when released, return smoothly without sticking.

Shutter Solenoid
The shutter solenoid is operated to prevent the continuous loading of bills when a bill has been inserted and is being held temporarily.

10. DISASSEMBLY AND ASSEMBLY POINT

10-1 ASS'Y COMPOSITION (The figure shows model NB-29A)

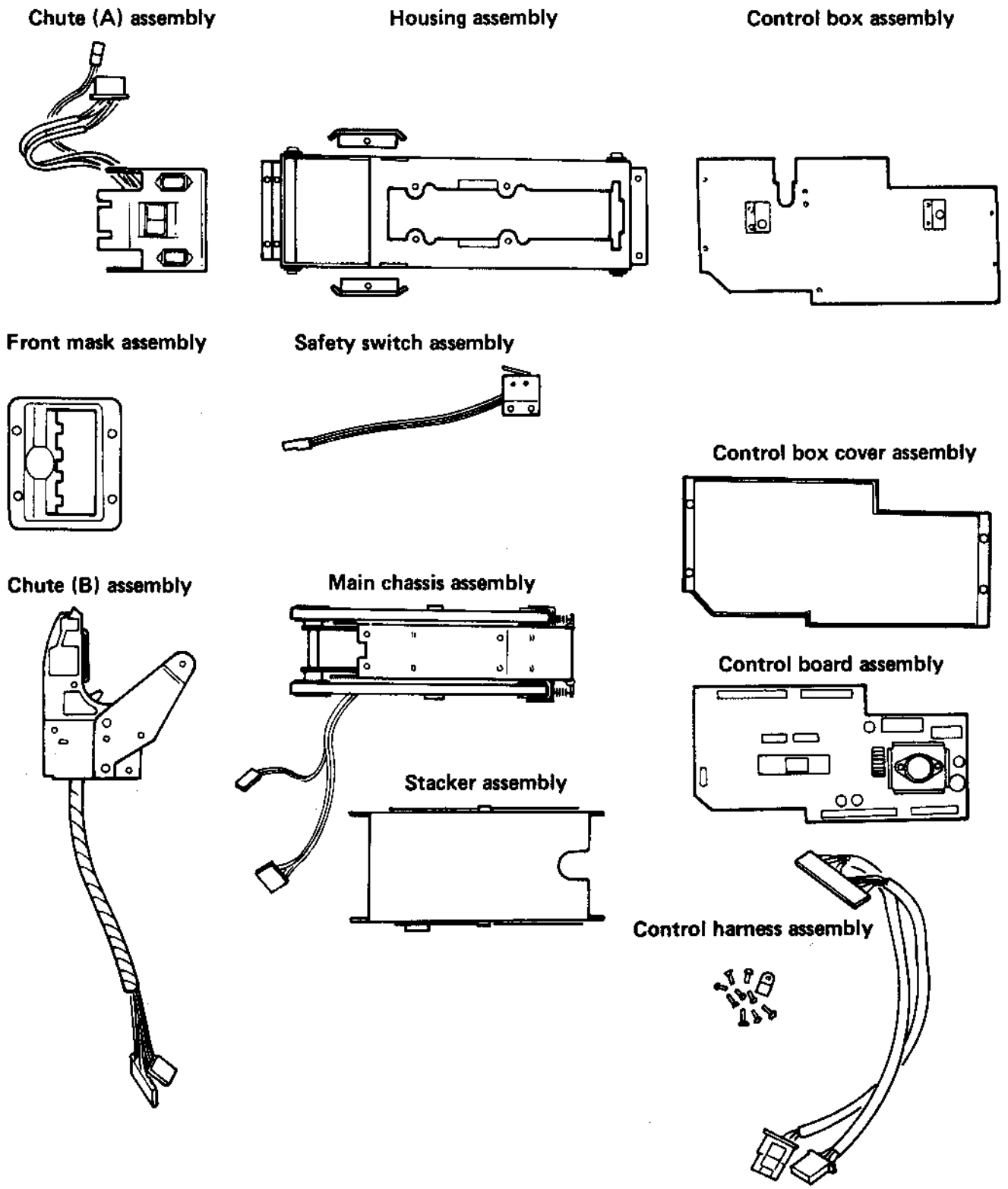

8-2 DISASSEMBLY AND ASSEMBLY PROCEDURE (The figure shows model NB-29A.)

(assembly in reverse order to disassembly)

(1) Overall view of NB-29A

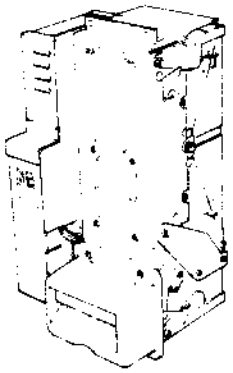

(2) Removing the control box cover

Remove the four screws holding the control box.

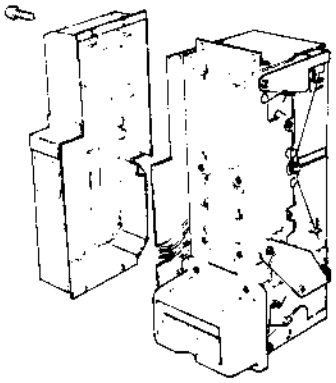

(3) Removing the control board assemly

1) Gently remove the connectors plugged into the control board assembly.

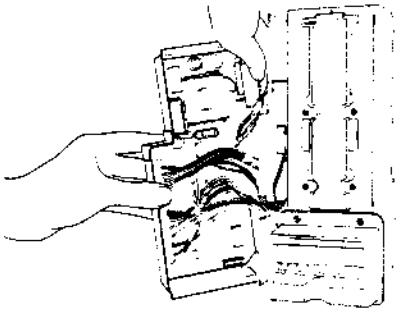

2) Remove the six screws holding the control board assembly.

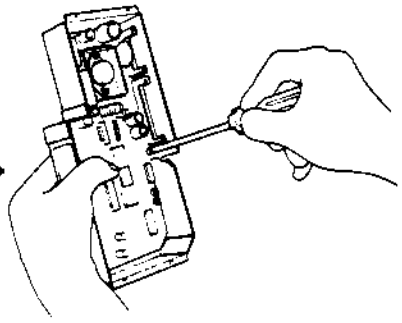

(4) Removing the control harness

Cut the harness band and remove the harness from the base of the control box.

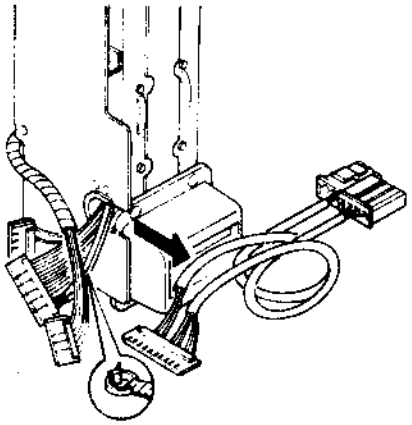

(5) Removing the stacker assembly

1) Cut the harness band and remove the two screws holding the base of the control box.

2) Lift the stacker, and remove the two arm shafts.

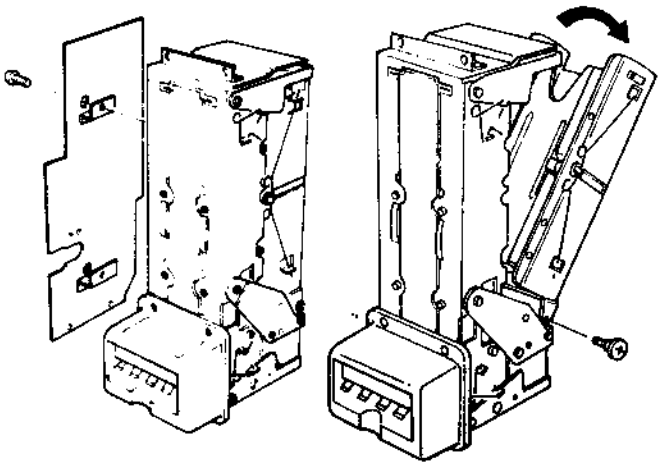

to the next page

(6) Removing the chute (B) assembly

Remove the two arm shafts.

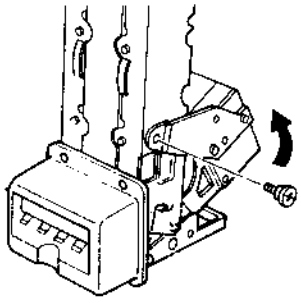

- **NBE-20**

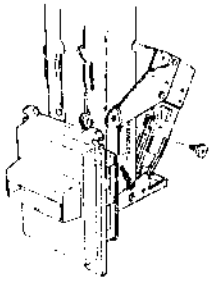

(7) Removing the front mask

- **NB-29A**

Remove the four screws holding the front mask. The mask door may be removed after removing the front mask.

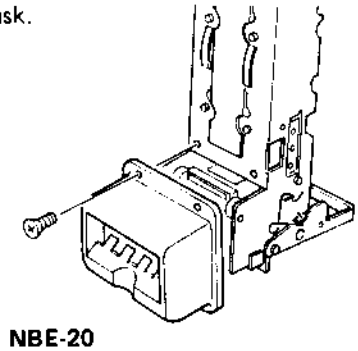

- **NBE-20**

Remove the 4 screws holding the front mask.

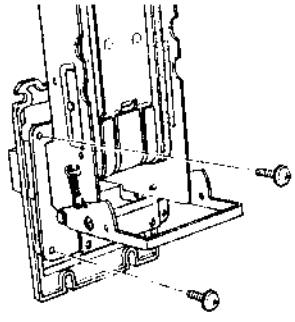

- **Removing the mask base**

Remove the 4 screws fixing the mask base and remove the mask base.

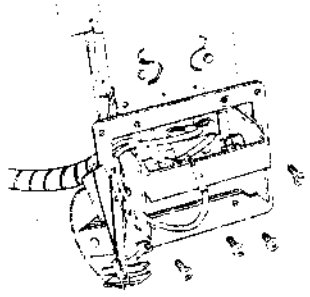

- **NBE-20 only**

Remove the 2 screws fixing the shutter solenoid assembly, and then remove the mask base.

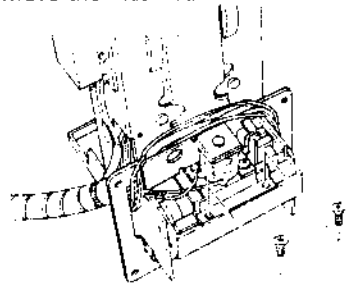

(8) Removing the chute (A) assembly

- **New type**

As the chute (A) assembly is an insertion type, disengage the latch at the front with a flat screwdriver, and then hold at the top and disengage the latch at the rear.

①

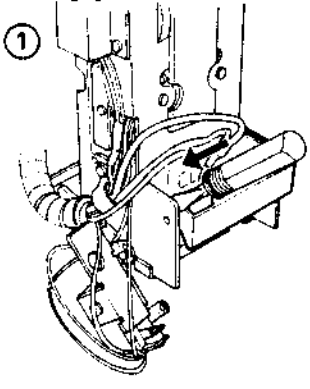

②

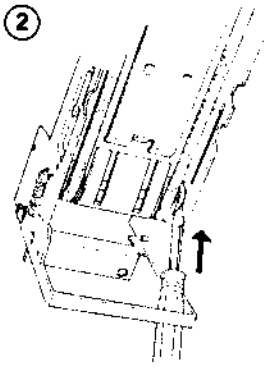

③

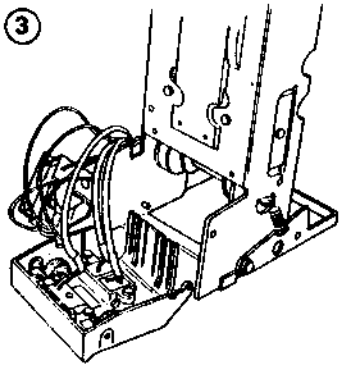

- **Old type**

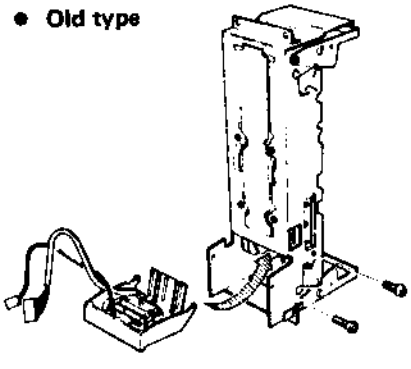

(9) Removing the main chassis assembly

Cut the harness band and remove the two belt guides. Remove the four screws holding housing.

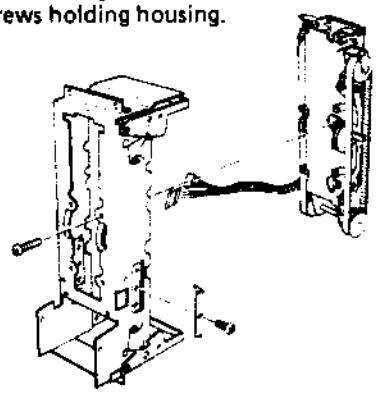

(10) Removing the safety switch assembly

Remove the two screws holding the switch.

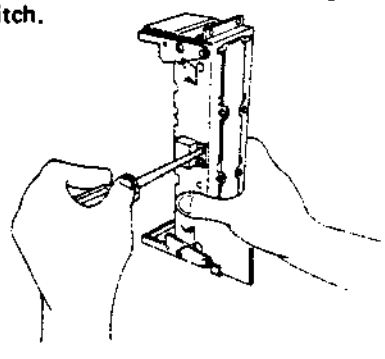

11. TROUBLE-SHOOTING

A Guide to the Diagnosis of Faults

Broken parts and faulty wiring are not included.

(1) When the machine refuses to operate when the power turned on

(2) When the machine rejects all bills inserted

(2-1) Refuses all bills

(2-2) When only a part of the bills is not accepted — Only 5$ bills; 1$ and 5$ bills

(2-3) When the machine rejects the bill again after accepting it

(3) Stack operation is not executed after a bill has been received.

(4) The stack operation is slow.

(5) The "Authentic Bill" signal is not put out
NB-20
NBE-20 – by system switch setting

(6) No escrow.

(1) When the machine refuses to operate when the power turned on

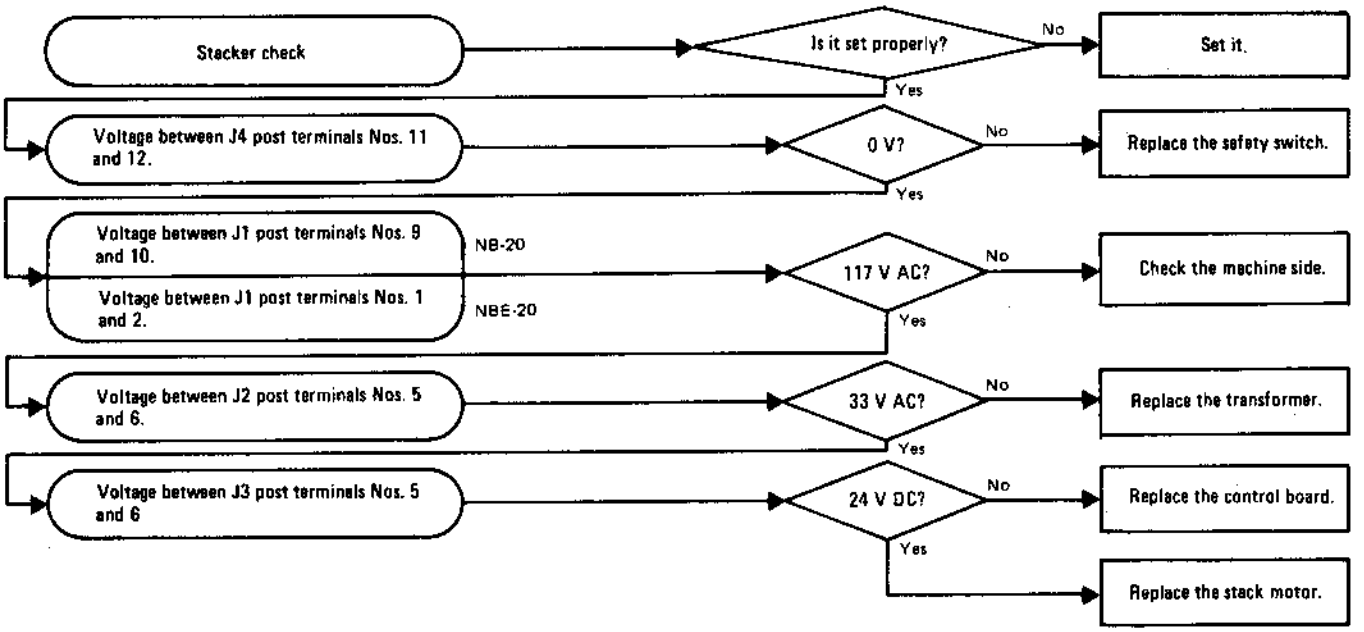

(2) When the machine rejects all bills inserted.

(2-1) Refuses all bills

#20 is 0V line. (Refer to Page 19)

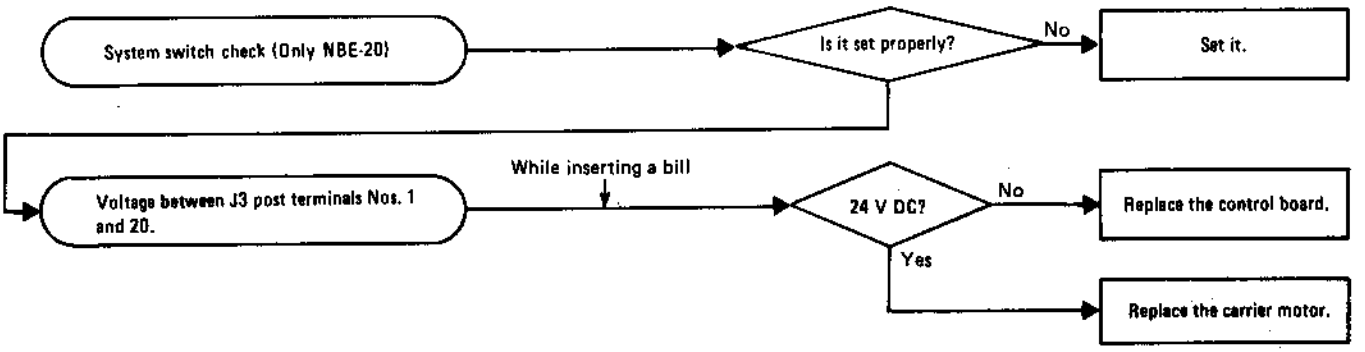

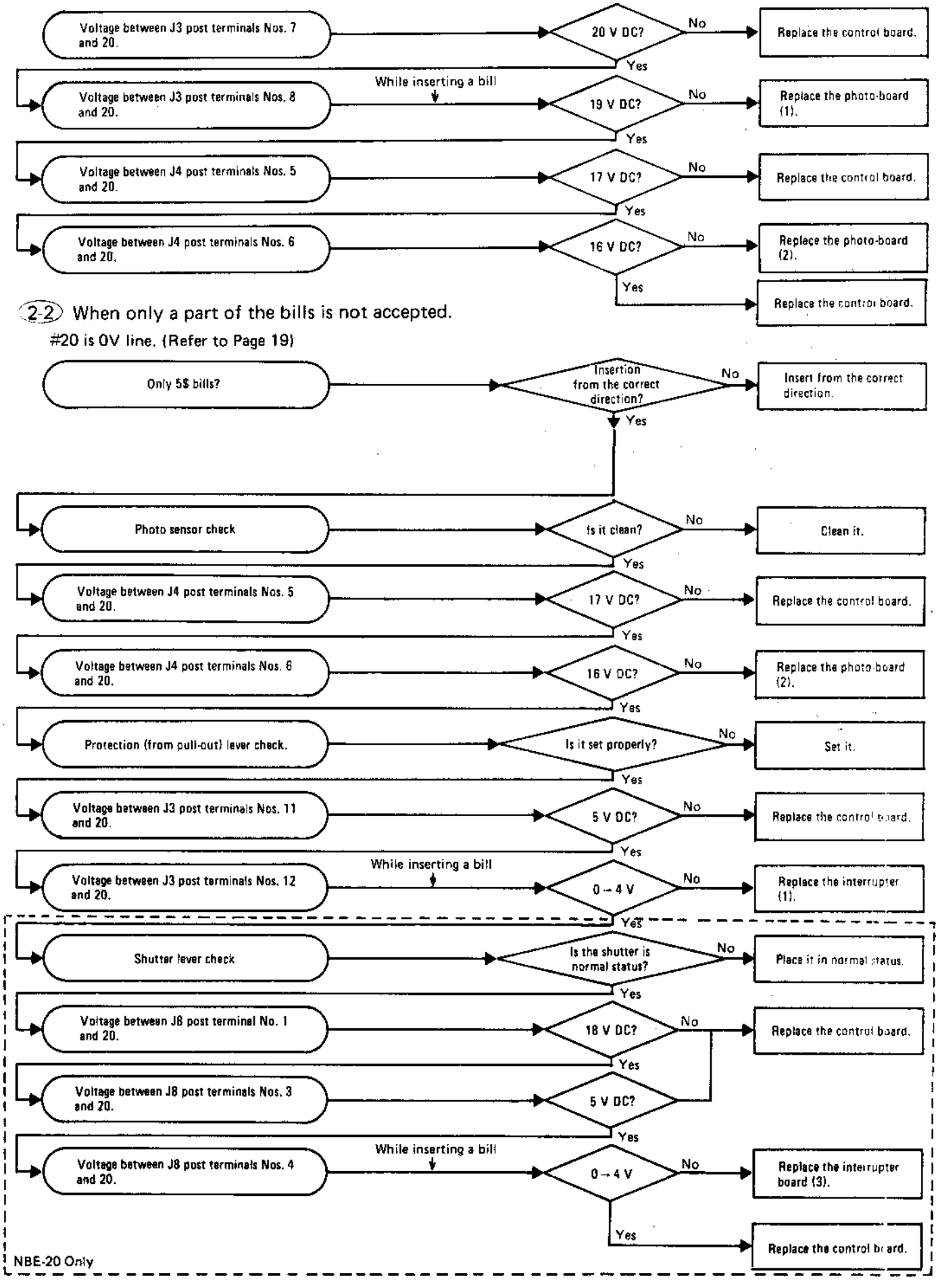
Voltage between J3 post terminals Nos. 7 and 20.
20 V DC?
No
Replace the control board.
Yes
While inserting a bill
Voltage between J3 post terminals Nos. 8 and 20.
19 V DC?
No
Replace the photo-board (1).
Yes
Voltage between J4 post terminals Nos. 5 and 20.
17 V DC?
No
Replace the control board.
Yes
Voltage between J4 post terminals Nos. 6 and 20.
16 V DC?
No
Replace the photo-board (2).
Yes
Replace the control board.
(2-2) When only a part of the bills is not accepted.
#20 is 0V line. (Refer to Page 19)
Only 5$ bills?
Insertion from the correct direction?
No
Insert from the correct direction.
Yes
Photo sensor check
Is it clean?
No
Clean it.
Yes
Voltage between J4 post terminals Nos. 5 and 20.
17 V DC?
No
Replace the control board.
Yes
Voltage between J4 post terminals Nos. 6 and 20.
16 V DC?
No
Replace the photo-board (2).
Yes
Protection (from pull-out) lever check.
Is it set properly?
No
Set it.
Yes
Voltage between J3 post terminals Nos. 11 and 20.
5 V DC?
No
Replace the control board.
Yes
While inserting a bill
Voltage between J3 post terminals Nos. 12 and 20.
0 → 4 V
No
Replace the interrupter (1).
Yes
Shutter lever check
Is the shutter is normal status?
No
Place it in normal status.
Yes
Voltage between J8 post terminal No. 1 and 20.
18 V DC?
No
Replace the control board.
Yes
Voltage between J8 post terminals Nos. 3 and 20.
5 V DC?
Yes
While inserting a bill
Voltage between J8 post terminals Nos. 4 and 20.
0 → 4 V
No
Replace the interrupter board (3).
Yes
Replace the control board.
NBE-20 Only

11. TROUBLE-SHOOTING

(2-3) When the machine rejects the bill again after accepting it

#20 is 0V line. (Refer to Page 19)

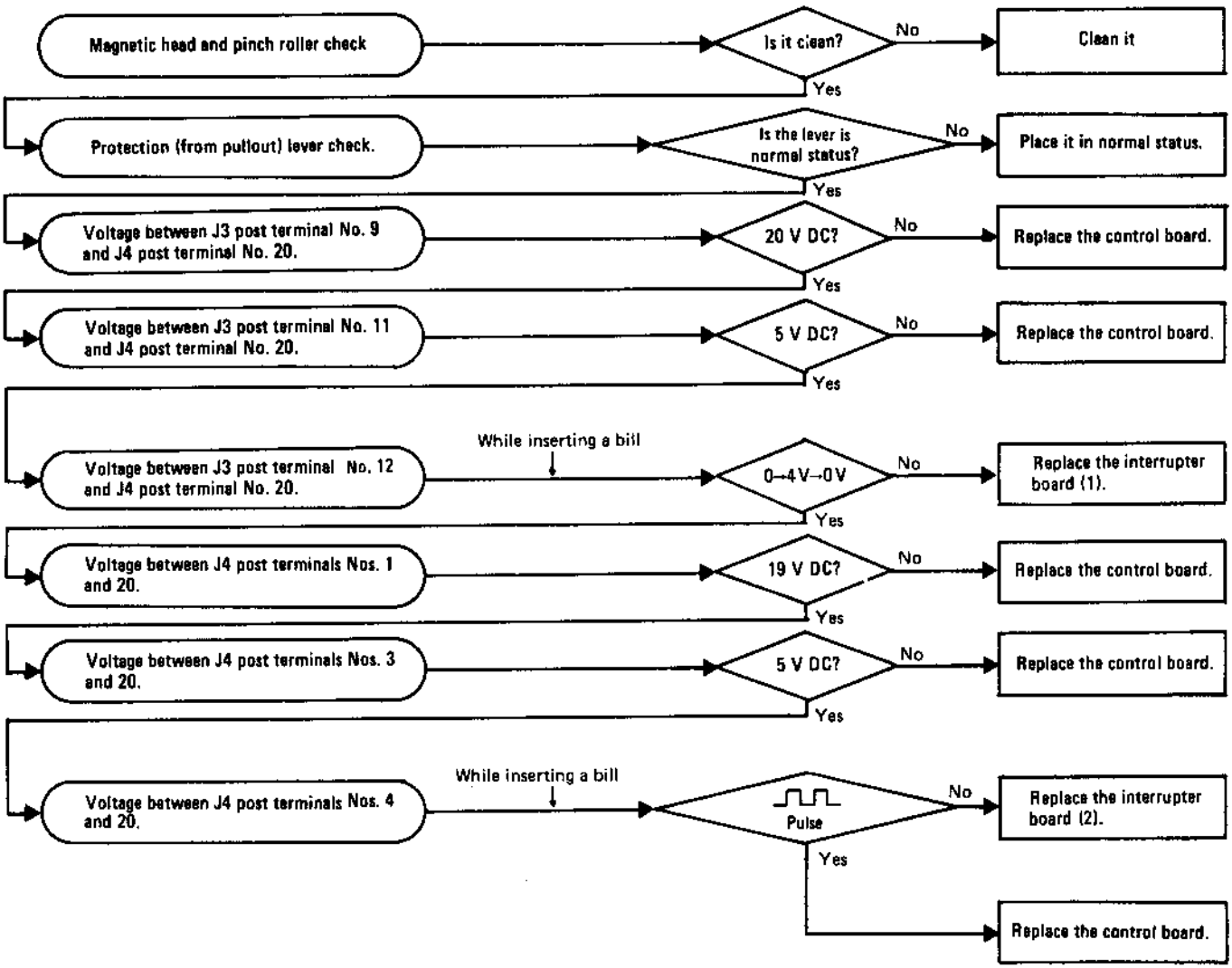

(3) Stack operation is not executed after a bill has been received.

#20 is 0V line. (Refer to Page 19)

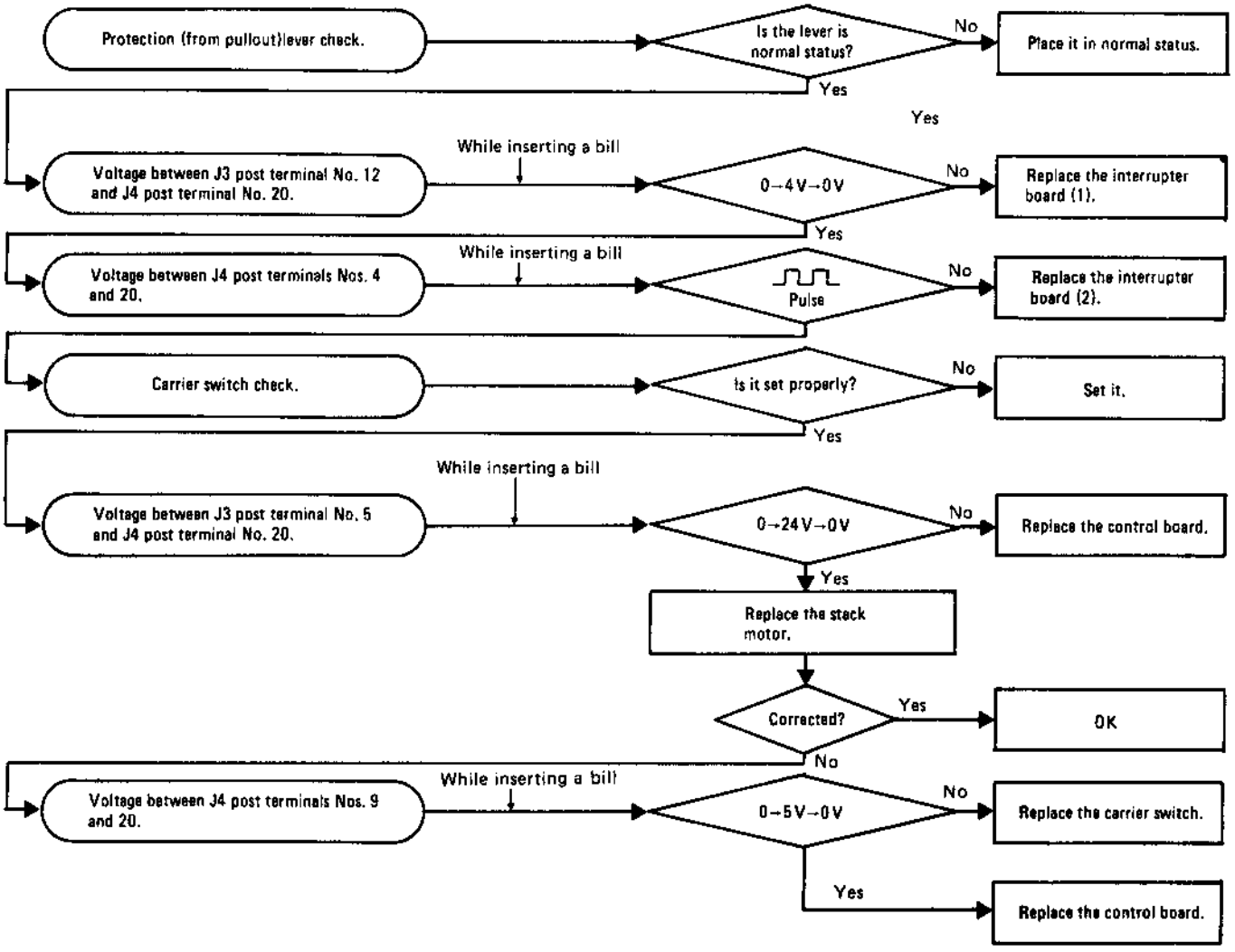

(4) The stack operation is slow.

#20 is 0V line. (Refer to Page 19)

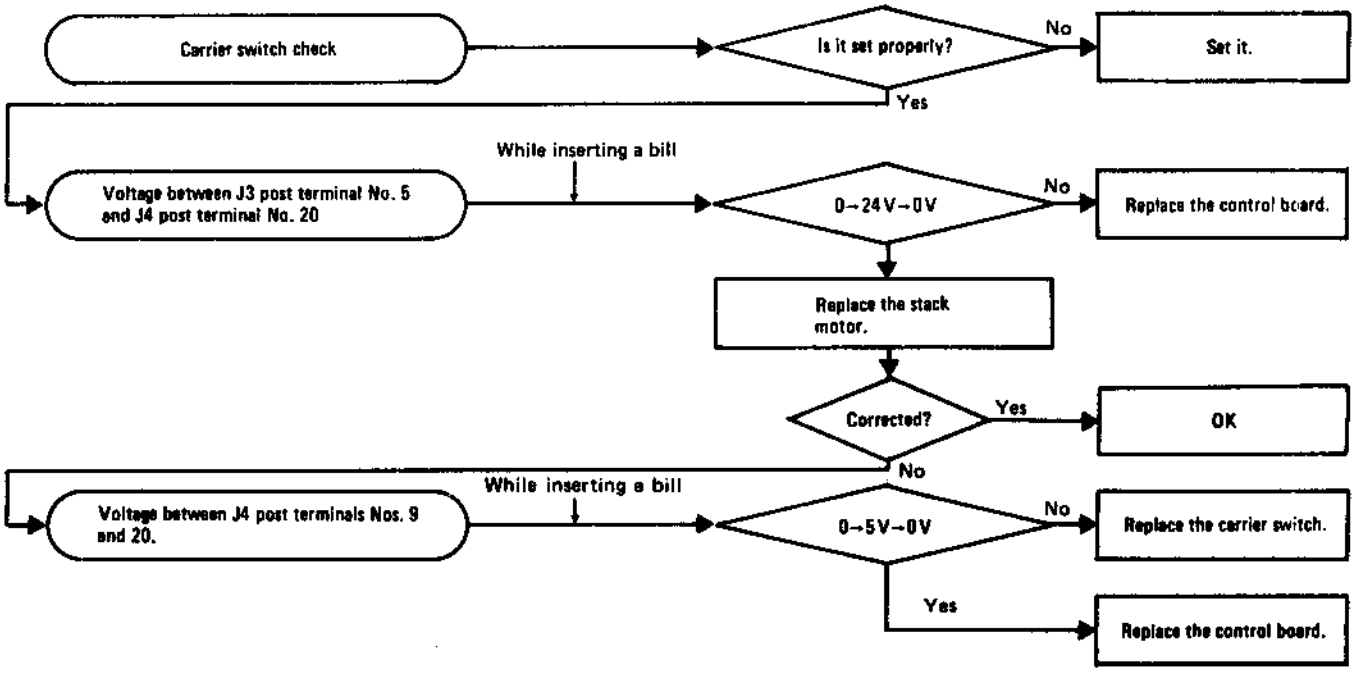

11. TROUBLE-SHOOTING

(5) The "Authentic Bill" signal is not put out.

NB-20

1 When the "Authentic Bill" signal is not put out.
Pull the AMP 4P plug.

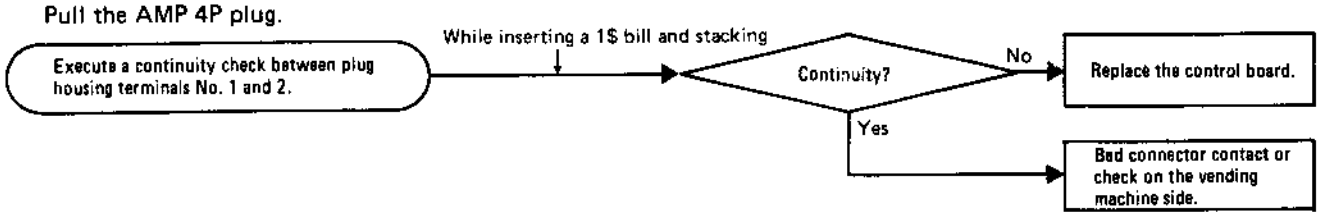

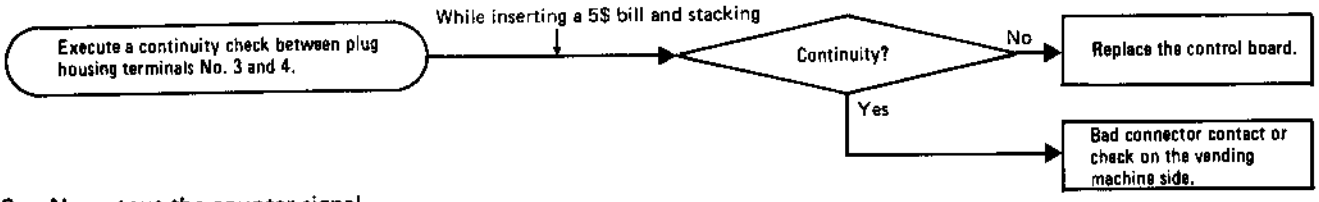

2 No output the counter signal.

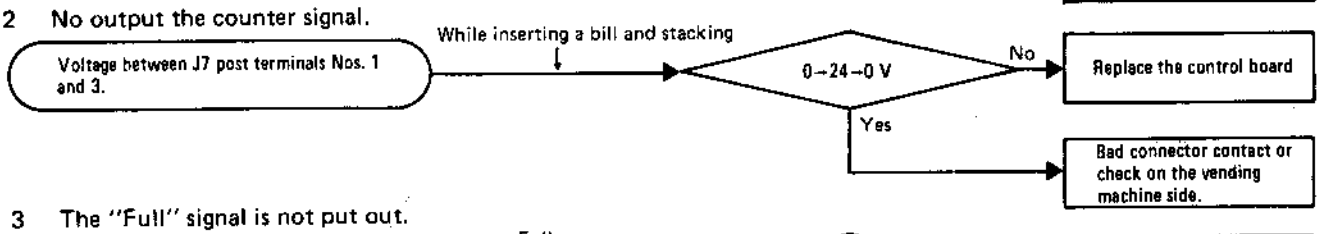

3 The "Full" signal is not put out.

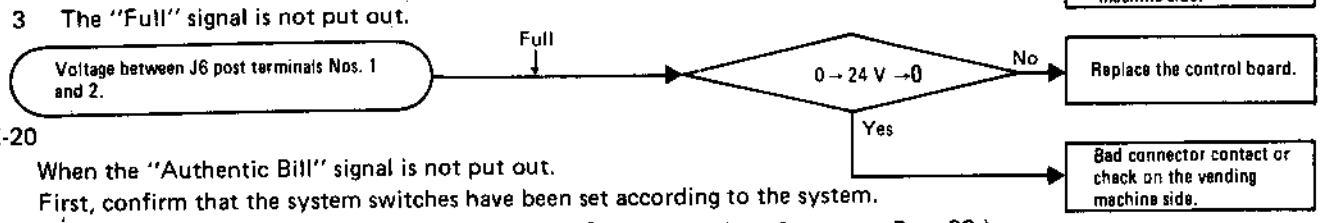

NBE-20

1 When the "Authentic Bill" signal is not put out.
First, confirm that the system switches have been set according to the system.

A. At the time of serial communication system (J6 Terminals make reference to Page 23.)
#20 is 0V line. (Refer to Page 19)

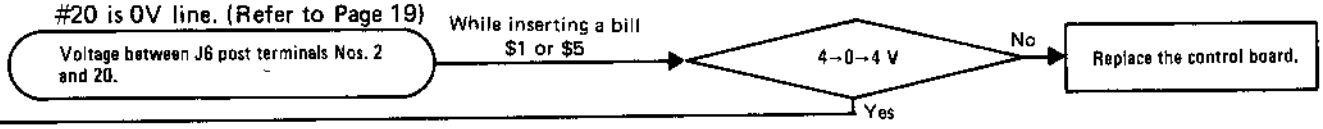

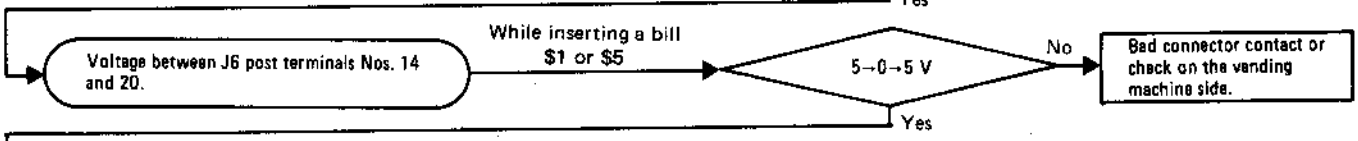

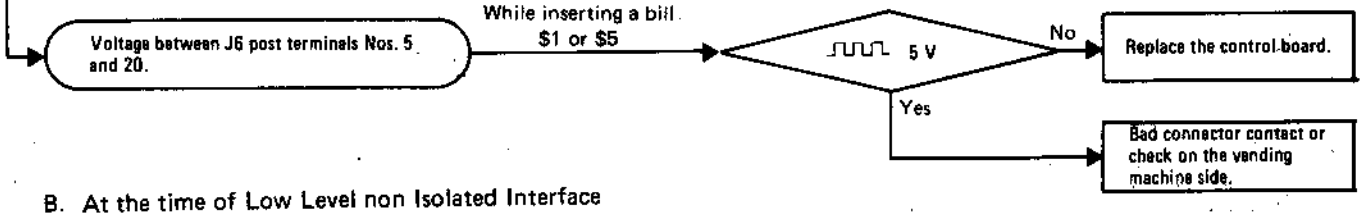

B. At the time of Low Level non Isolated Interface
#20 is 0V line. (Refer to Page 19)

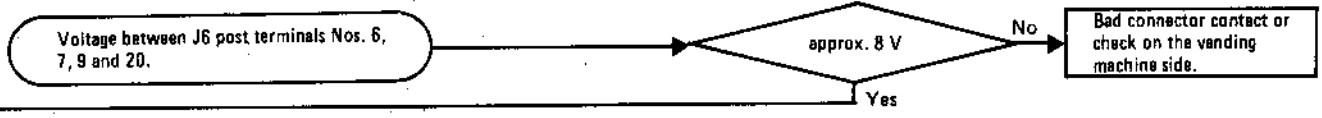

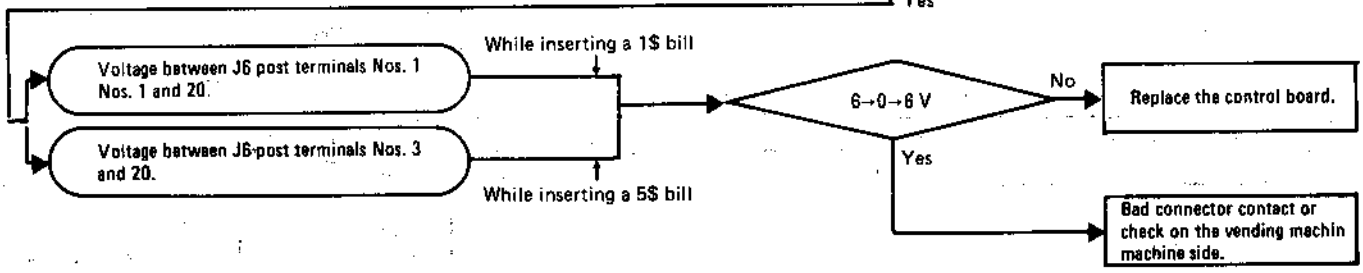

C. At the time of Isolated or Low Level Interface

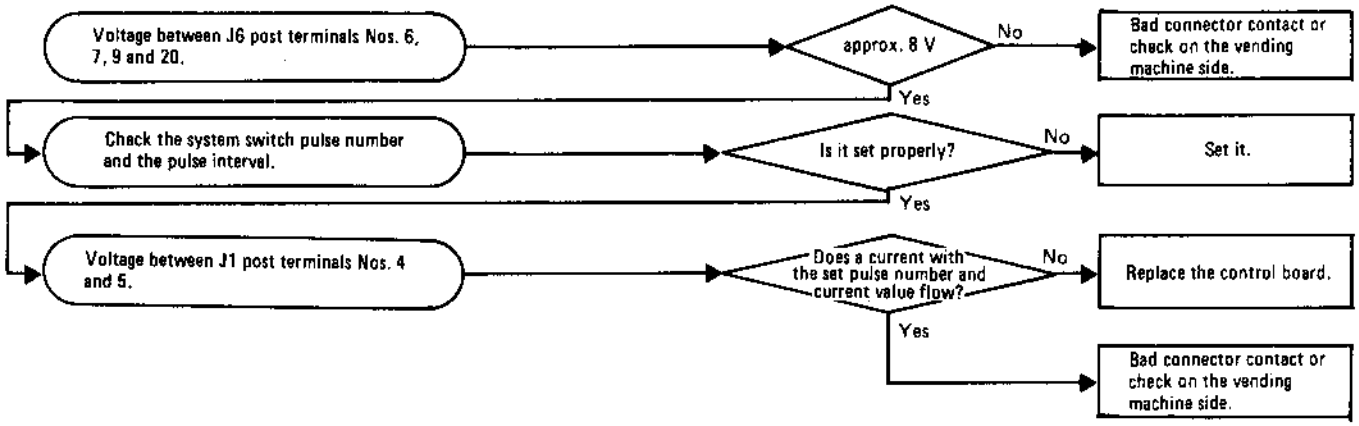

(6) No escrow

NBE-20 Only

A. At the time of serial communication system

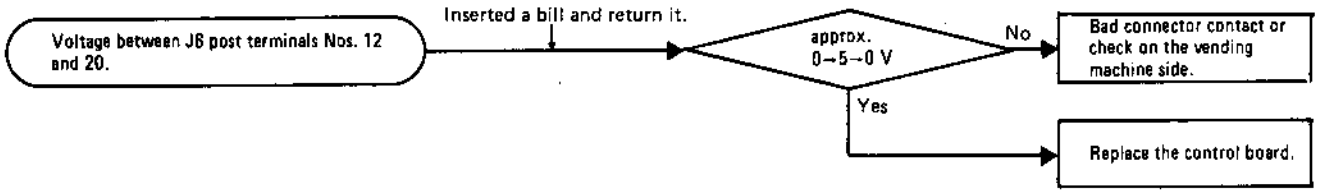

B. At the time of Low Level non Isolated Interface

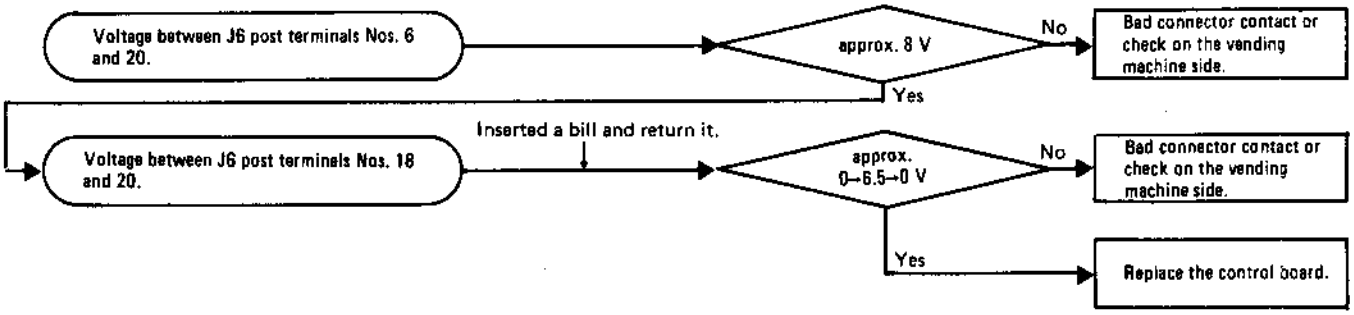

C. At the time of Isolated or Low Level Interface

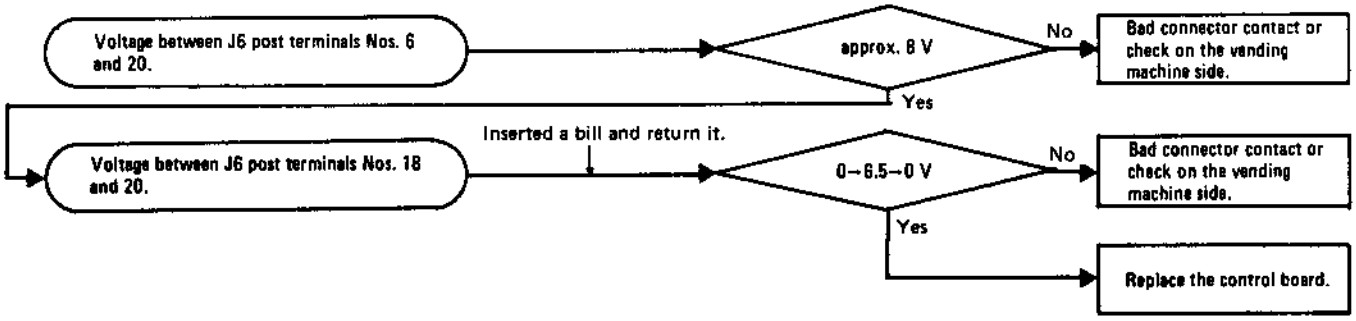

12. EXPLODED VIEW AND PARTS LIST

12-1 NB-20 SERIES

1 Housing and Control Box

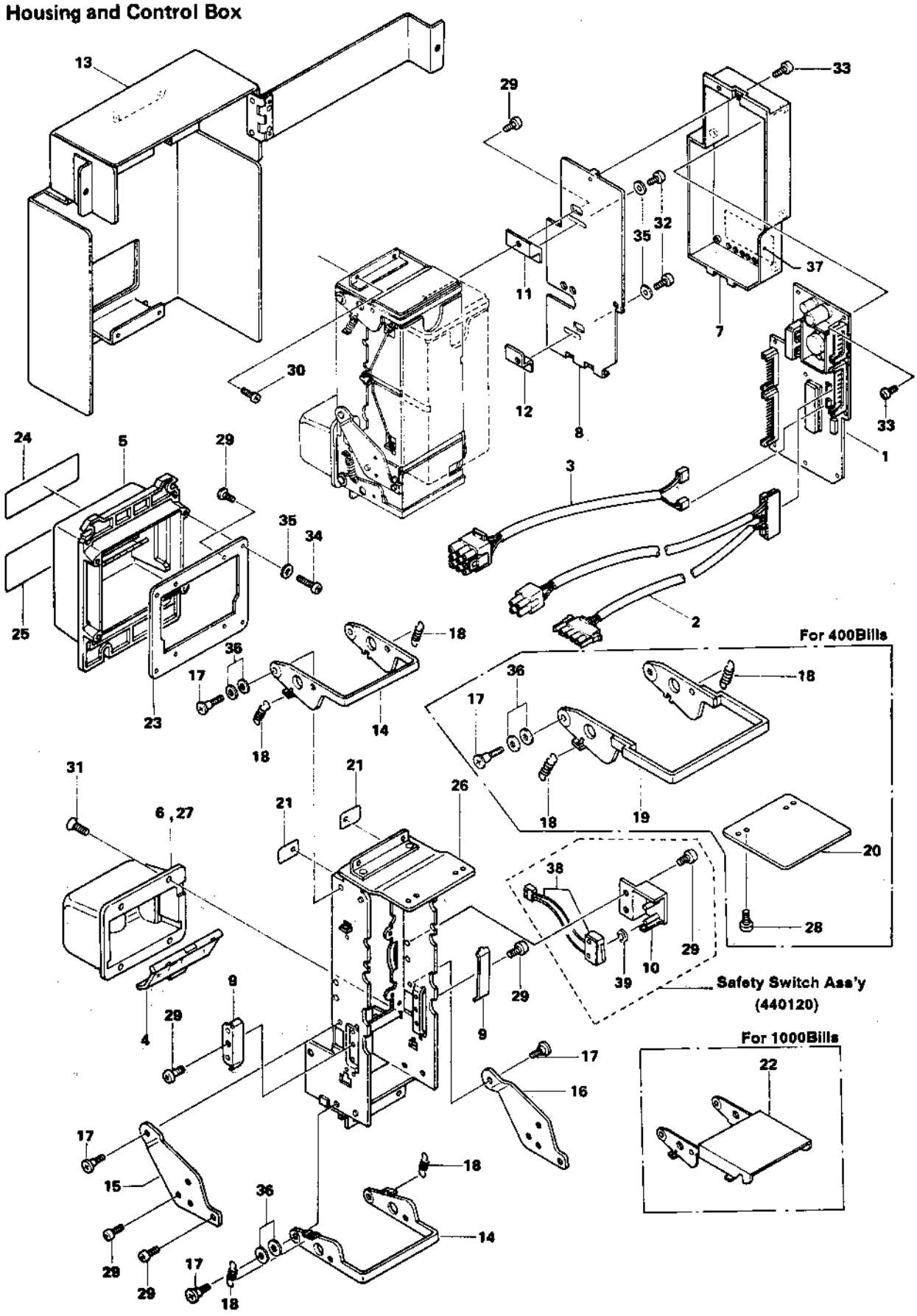

12. EXPLODED VIEW AND PARTS LIST

12-1 NB-20 SERIES

Index No.	Part No.	Description	Q'ty	Remarks	A	B	C	D	E	F	G	H	I	J	K
1	440221	Control Board A'ssy	1		o	o	o	o	o	o	o	o	o	o	
2	440327	Control Harness A'ssy	1		o	o	o	o	o	o	o	o	o	o	
3	440328	Counter Harness A'ssy	1							o	o	o	o	o	o
4	440407	Mask Door	1		o				o	o	o	o	o	o	
5	440431	Front Mask (B)	1			o	o	o							o
6	440432	Front Mask (D)	1	NB-29 Series Old Type	o				o	o	o	o			
7	440447	Control Box Cover	1		o	o	o	o	o	o	o	o	o	o	o
8	440448	Control Box Base	1		o	o	o	o	o	o	o	o	o	o	
9	440449	Belt Guide	2		o	o	o	o	o	o	o	o	o	o	o
10	440451	Safety Switch Mounting Plate	1		o	o	o	o	o	o	o	o	o	o	o
11	440452	Base Leg (1)	1		o	o	o	o	o	o	o	o	o	o	
12	440454	Base Leg (2)	1		o	o	o	o	o	o	o	o	o	o	
13	440502	Mounting Bracket	1		o				o						
14	440506	Latch	2		o	o	1	1	o	1	1	1	o	1	1
15	440518	Arm (R)	1		o	o	o	o	o	o	o	o	o	o	o
16	440519	Arm (L)	1		o	o	o	o	o	o	o	o	o	o	o
17	440534	Arm Shaft	8		o	o	o	o	o	o	o	o	o	o	o
18	440576	Latch Spring	4		o	o	o	o	o	o	o	o	o	o	o
19	440584	Latch (G)	1				o	o		o	o			o	o
20	440585	Stacker Roof (G)	1				o	o		o	o			o	o
21	440590	Lift Spring Seal	2		o	o	o	o	o	o	o	o	o	o	o
22	440805	Latch (A)	1									o			
23	440820	Mask Base	1		o	o	o	o	o	o	o	o	o	o	o
24	440839	Deacal (3)	1			o	o	o							o
25	440840	Deacal (4)	1			o	o	o							o
26	440868	Housing	1		o	o	o	o	o	o	o	o	o	o	o
27	440892	Front Mask (J)	1		o				o	o	o	o	o	o	
28	900006	Screw	2	(+/−) Pan-head M3 x 0.5 x 4			o	o		o	o			o	o
29	900008	Screw	14	(+/−) Pan-head M3 x 0.5 x 5	o	o	o	o	o	o	o	o	o	o	o
30	900015	Screw	4	(+/−) Pan-head M4 x 0.7 x 8	o	o	o	o	o	o	o	o	o	o	o
31	902001	Screw	4	Flush (+) M3 x 0.5 x 8	o				o	o	o	o	o	o	
32	904001	Tapping Screw	2	(+) Pan-head 3 x 1 x 8	o	o	o	o	o	o	o	o	o	o	o
33	905011	Tapping Screw	7	(+) Pan-head 3 x 1 x 8	o	o	o	o	o	o	o	o	o	o	o
34	906035	Screw	4	(+/−) Truss-head M3 x 0.5 x 12		o	o	o							
35	907001	Washer	6	ϕ3.3 x t0.5 x ϕ8	2	o	o	o	2	2	2	2	2	2	2
36	907005	Washer	8	ϕ4 x t0.5 x ϕ8	o	o	o	o	o	o	o	o	o	o	o
37	440931	U. S. PATENT Seal (1)	1		o	o	o	o	o	o	o	o	o	o	o
38	440099	Safety Switch Assy	1		o		o		o	o		o	o	o	o
38-1	993026	Safety Switch	1		o		o		o	o		o	o	o	o
38-2	440310	Safety Switch Harness Assy	1		o		o		o	o		o	o	o	o
38'	440098	Safety Switch (B) Assy	1			o		o			o				
38'-1	993026	Safety Switch	1			o		o			o				
38'-2	440332	Safety Switch (B) Harness Assy	1			o		o			o				
39	907209	Spring Washer ϕ2.1 x ϕ4.4 x t0.5	2		o	o	o	o	o	o	o	o	o	o	o
		NB-2JA-400 Parts													
1	440234	Control Board A'ssy	1												o
2	440335	Control Harness A'ssy	1												o
8	440465	Control Box Base (2)	1												o
11	440898	Base Leg (5)	1												o
12	440899	Base Leg (6)	1												o

Sign	A	B	C	D	E	F	G	H	I	J
Model	NB-20	NB-27B	NB-27A-400	NB-27B-400	NB-29	NB-29A-400	NB-29B-400	NB-29-1000	NB-2FA	NB-2FA-400

Sign	K
Model	NB-2JA-400

12. EXPLODED VIEW AND PARTS LIST

12-1 NB-20 SERIES

2 Main Chassis A'ssy

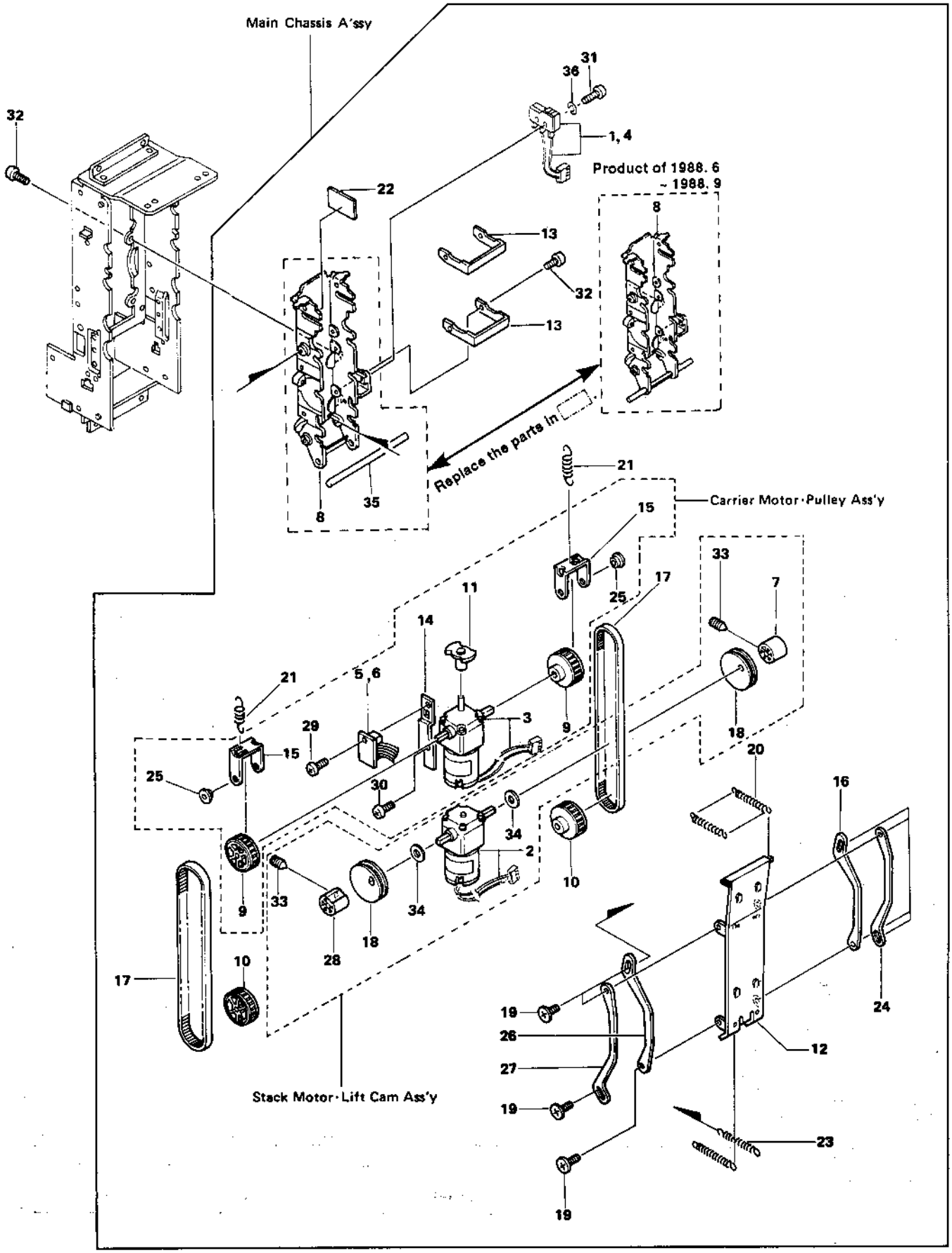

12. EXPLODED VIEW AND PARTS LIST

12-1 NB-20 SERIES

Index No.	Part No.	Description	Q'ty	Remarks	A	B	C	D	E	F	G	H	I	J	K
1	440121	Carrier Switch A'ssy	1		o		o		o	o		o	o	o	o
2	440094	Stack Motor Harness Assy	1		o		o		o	o		o	o	o	o
2-1	440130	Stack Motor Assy	1		o		o		o	o		o	o	o	o
2-2	440304	Stack Motor Harness Assy	1		o		o		o	o		o	o	o	o
2'	440095	Stack Motor Harness (B) Assy	1			o		o			o				
2'-1	440130	Stack Motor Assy	1			o		o			o				
2'-2	440316	Stack Motor Harness (B) Assy	1			o		o			o				
3	440093	Carrier Motor Harness Assy	1		o		o		o	o		o	o	o	o
3-1	440131	Carrier Motor Assy	1		o		o		o	o		o	o	o	o
3-2	440311	Carrier Motor Harness Assy	1		o		o		o	o		o	o	o	o
3'	440096	Carrier Motor Harness (B) Assy	1			o		o			o				
3'-1	440131	Carrier Motor Assy	1			o		o			o				
3'-2	440323	Carrier Motor Harness (B) Assy	1			o		o			o				
4	440140	Carrier Switch (B) A'ssy	1			o		o			o				
5	440203	Interrupter Board (1) A'ssy	1		o		o		o	o		o	o	o	o
6	440213	Interrupter Board (1) (B) A'ssy	1			o		o			o				
7	440406	Carrier Cam	1		o	o	o	o	o	o	o	o	o	o	o
8	440456	Main Chassis	1		o	o	o	o	o	o	o	o	o	o	o
9	440459	Large Pulley (1)	2		o	o	o	o	o	o	o	o	o	o	o
10	440460	Large Pulley (2)	2		o	o	o	o	o	o	o	o	o	o	o
11	440463	Tachometer	1		o	o	o	o	o	o	o	o	o	o	o
12	440504	Lift Base	1		o	o	o	o	o	o	o	o	o	o	o
13	440514	Motor Bracket	2		o	o	o	o	o	o	o	o	o	o	o
14	440516	Tachometer Bracket	1		o	o	o	o	o	o	o	o	o	o	o
15	440529	Spring Bracket	2		o	o	o	o	o	o	o	o	o	o	o
16	440530	Lift Lever (1) R	1		o	o	o	o	o	o	o	o	o	o	o
17	440533	Belt (2)	2		o	o	o	o	o	o	o	o	o	o	o
18	440535	Lift Cam	2		o	o	o	o	o	o	o	o	o	o	o
19	440539	Lift Lever Shaft	8		o	o	o	o	o	o	o	o	o	o	o
20	440542	Lift Spring (1)	2		o	o	o	o	o	o	o	o	o	o	o
21	440543	Belt Spring	2		o	o	o	o	o	o	o	o	o	o	o
22	440558	Insulated Sheet	1		o	o	o	o	o	o	o	o	o	o	o
23	440564	Lift Spring (2)	2		o	o	o	o	o	o	o	o	o	o	o
24	440568	Lift Lever (2) R	1		o	o	o	o	o	o	o	o	o	o	o
25	440570	Guide Spacer	2		o	o	o	o	o	o	o	o	o	o	o
26	440824	Lift Lever (1) L	1		o	o	o	o	o	o	o	o	o	o	o
27	440825	Lift Lever (2) L	1		o	o	o	o	o	o	o	o	o	o	o
28	443598	Cam Stopper	1		o	o	o	o	o	o	o	o	o	o	o
29	900008	Screw	1	(+/−) Pan-head M3 x 0.5 x 5	o	o	o	o	o	o	o	o	o	o	o
30	904001	Plus Tight Screw	1	(+) Pan-head 3 x 1 x 8	o	o	o	o	o	o	o	o	o	o	o
31	*905002*	*Tapping Screw*	*2*	*(+) Pan-head 2 x 10*	o	o	o	o	o	o	o	o	o	o	o
32	905015	Tapping Screw	8	(+) Pan-head 3 x 1 x 6	o	o	o	o	o	o	o	o	o	o	o
33	906007	Set Screw	2	Flat tip M3 x 0.5 x 4	o	o	o	o	o	o	o	o	o	o	o
34	907908	Polyslider	2		o	o	o	o	o	o	o	o	o	o	o
35	440536	Large Pully Shaft	1		o	o	o	o	o	o	o	o	o	o	o
36	907209	Spring Washer	2	ϕ2.1 x ϕ4.4 x t0.5	o	o	o	o	o	o	o	o	o	o	o

Sign	A	B	C	D	E	F	G	H	I	J
Model	NB-20	NB-27B	NB-27A-400	NB-27B-400	NB-29	NB-29A-400	NB-29B-400	NB-29-1000	NB-2FA	NB-2FA-400

Sign	K
Model	NB-2JA-400

3 Chute (A) and Chute (B) A'ssy

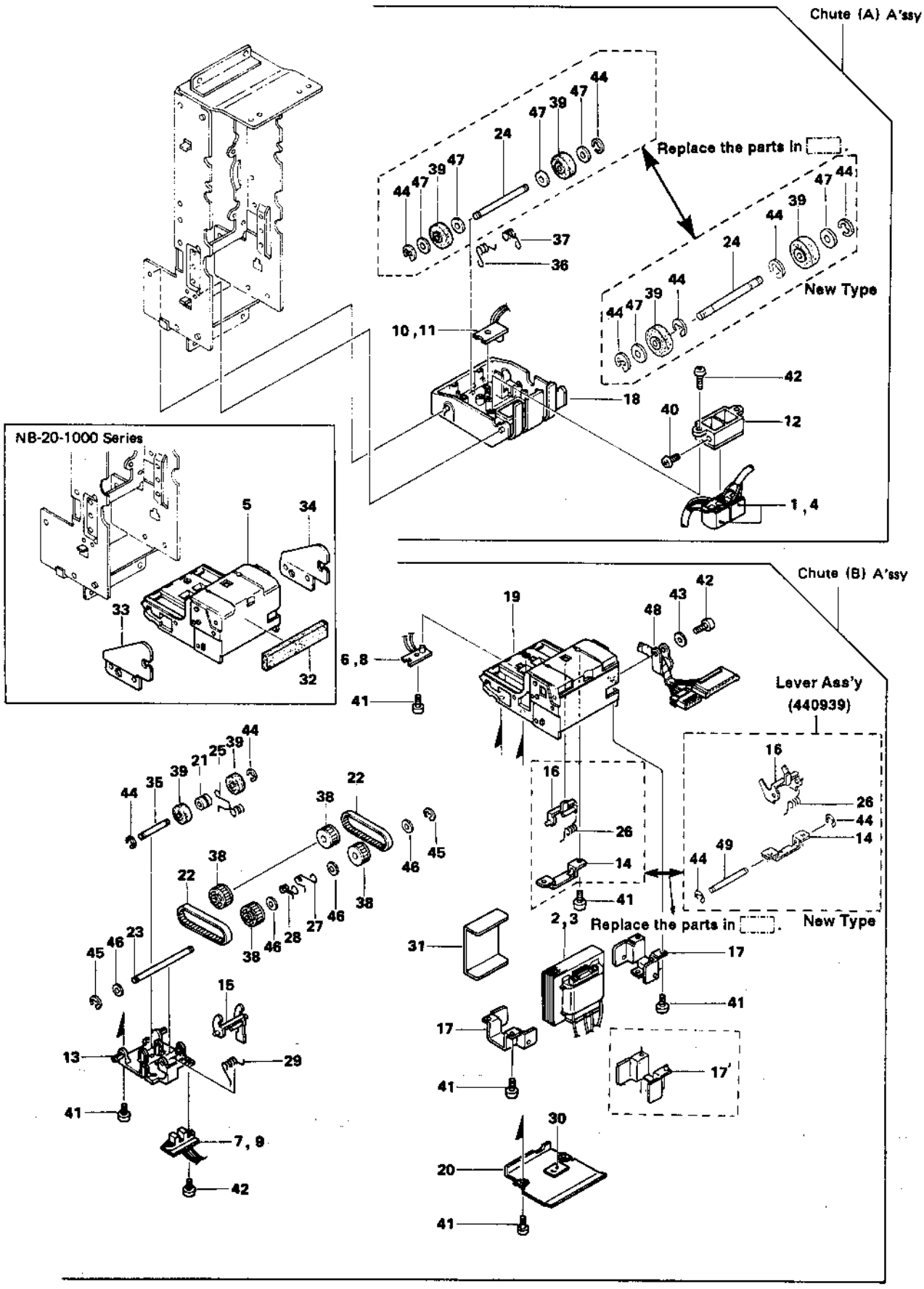

Index No.	Part No.	Description	Q'ty	Remarks	A	B	C	D	E	F	G	H	I	J	K
1	440004	Magnetic Head A'ssy	1		o		o		o	o		o	o	o	o
2	440122	Transformer A'ssy	1		o		o		o	o		o	o	o	
3	440133	Transformer (B) A'ssy	1			o		o			o				
4	440008	Magnetic Head (B) A'ssy	1			o		o			o				
5	440146	Chute (B) - 1000 A'ssy	1									o			
6	440205	Photo-board (1) A'ssy	1		o		o		o	o		o	o	o	o
7	440209	Interrupter Board (2) A'ssy	1		o		o		o	o		o	o	o	o
8	440215	Photo-board (1) (B) A'ssy	1			o		o			o				
9	440219	Interrupter Board (2) (B) A'ssy	1			o		o			o				
10	440226	Photo-board (2) - 20 A'ssy	1		o		o		o	o		o	o	o	
11	440231	Photo-board (2) - 27B A'ssy	1			o		o			o				
12	440430	Head Bracket 20	1		o	o	o	o	o	o	o	o	o	o	o
13	440442	Shaft Bracket	1		o	o	o	o	o	o	o	o	o	o	o
14★	440443	Prevention (of hanging) Lever Bracket	1	×1	o	o	o	o	o	o	o	o	o	o	o
	443807	Prevention (of hanging) Lever Bracket	1		o	o	o	o	o	o	o	o	o	o	o
15	440444	Drawing Prevention Lever	1		o	o	o	o	o	o	o	o	o	o	o
16★	440445	Prevention (of hanging) Lever	1	×1	o	o	o	o	o	o	o	o	o	o	o
	440940	Prevention (of hanging) Lever	1		o	o	o	o	o	o	o	o	o	o	o
17	440450	Transformer Bracket	2		o	o	o	o	o	o	o	o	o	o	
17'	440473	Transformer Bracket (2)	1		o	o	o	o	o	o	o	o	o	o	
18	440457	Chute (A)	1		o	o	o	o	o	o	o	o	o	o	o
19	440458	Chute (B)	1		o	o	o	o	o	o	o	o	o	o	o
20	440510	Bottom Plate	1		o	o	o	o	o	o	o	o	o	o	o
21	440528	Pinch Roller Spacer	1		o	o	o	o	o	o	o	o	o	o	o
22	440532	Belt (1)	2		o	o	o	o	o	o	o	o	o	o	o
23	440538	Small Pulley Shaft	1		o	o	o	o	o	o	o	o	o	o	o
24★	440540	Feed Roller Shaft (Old Type)	1	×1	o	o	o	o	o	o	o	o	o	o	o
	440894	Carrier Roller Pin	1		o	o	o	o	o	o	o	o	o	o	o
25	440544	Pinch Roller Spring	1		o	o	o	o	o	o	o	o	o	o	o
26	440546	Lever Spring	1		o	o	o	o	o	o	o	o	o	o	o
27	440550	Pinch Roller Spring (R)	1		o	o	o	o	o	o	o	o	o	o	o
28	440551	Pinch Roller Spring (L)	1		o	o	o	o	o	o	o	o	o	o	o
29	440554	Drawing Prevention Lever Spring	1		o	o	o	o	o	o	o	o	o	o	o
30	440558	Insulated Sheet	1		o	o	o	o	o	o	o	o	o	o	o
31	440563	Shield Plate	1		o	o	o	o	o	o	o	o	o	o	o
32	440802	Cushion	1								o				
33	440862	CS Plate (R)	1								o				
34	440863	CS Plate (L)	1								o				
35	440893	Pinch Roller Pin	1		o	o	o	o	o	o	o	o	o	o	o
36	440895	Insert Roller Spring (R)	1		o	o	o	o	o	o	o	o	o	o	o
37	440896	Insert Roller Spring (L)	1		o	o	o	o	o	o	o	o	o	o	o
38	412408	Timing Pulley (B)	4		o	o	o	o	o	o	o	o	o	o	o
39	412418	Pinch Roller	4		o	o	o	o	o	o	o	o	o	o	o
40	900001	Screw	4	(+) Pan-head M2 x 0.25 x 2.5	o	o	o	o	o	o	o	o	o	o	o
41	900008	Screw	13	(+/−) Pan-head M3 x 0.5 x 5	o	o	o	o	o	o	o	o	o	o	o
42	904001	Tapping Screw	4	(+) Pan-head 3 x 1 x 8	o	o	o	o	o	o	o	o	o	o	o
43	907001	Washer	1	φ3.3 x t0.5 x φ8	o	o	o	o	o	o	o	o	o	o	o
44	907403	E-ring	4	2φ	o	o	o	o	o	o	o	o	o	o	o
45	907404	E-ring	2	3φ	o	o	o	o	o	o	o	o	o	o	o
46	907906	Polysider	4	φ4.1 x t0.13 x φ6.5	o	o	o	o	o	o	o	o	o	o	o
47	907907	Polysider	4	φ3.1 x t0.13 x φ5.4	o	o	o	o	o	o	o	o	o	o	o
48	927019	Nylon Clip	1		o	o	o	o	o	o	o	o	o	o	o
49	443554	Lever Shaft	1		o	o	o	o	o	o	o	o	o	o	o
		NB-2JA-400 Parts													
10	440227	Photo-board (2) - 29 A'ssy	1												o

Note: In regard to Parts of Magnetic Head Assembly, refer to " TABLE of Magnetic Head Bracket Assembly ".
The parts mark ★ are not interchangeable with the Old Type Parts.

Sign	A	B	C	D	E	F	G	H	I	J
Model	NB-20	NB-27B	NB-27A-400	NB-27B-400	NB-29	NB-29A-400	NB-29B-400	NB-29-1000	NB-2FA	NB-2FA-400
Sign	K									
Model	NB-2JA-400									

12. EXPLODED VIEW AND PARTS LIST

12-1 NB-20 SERIES

4 Stacker A'ssy

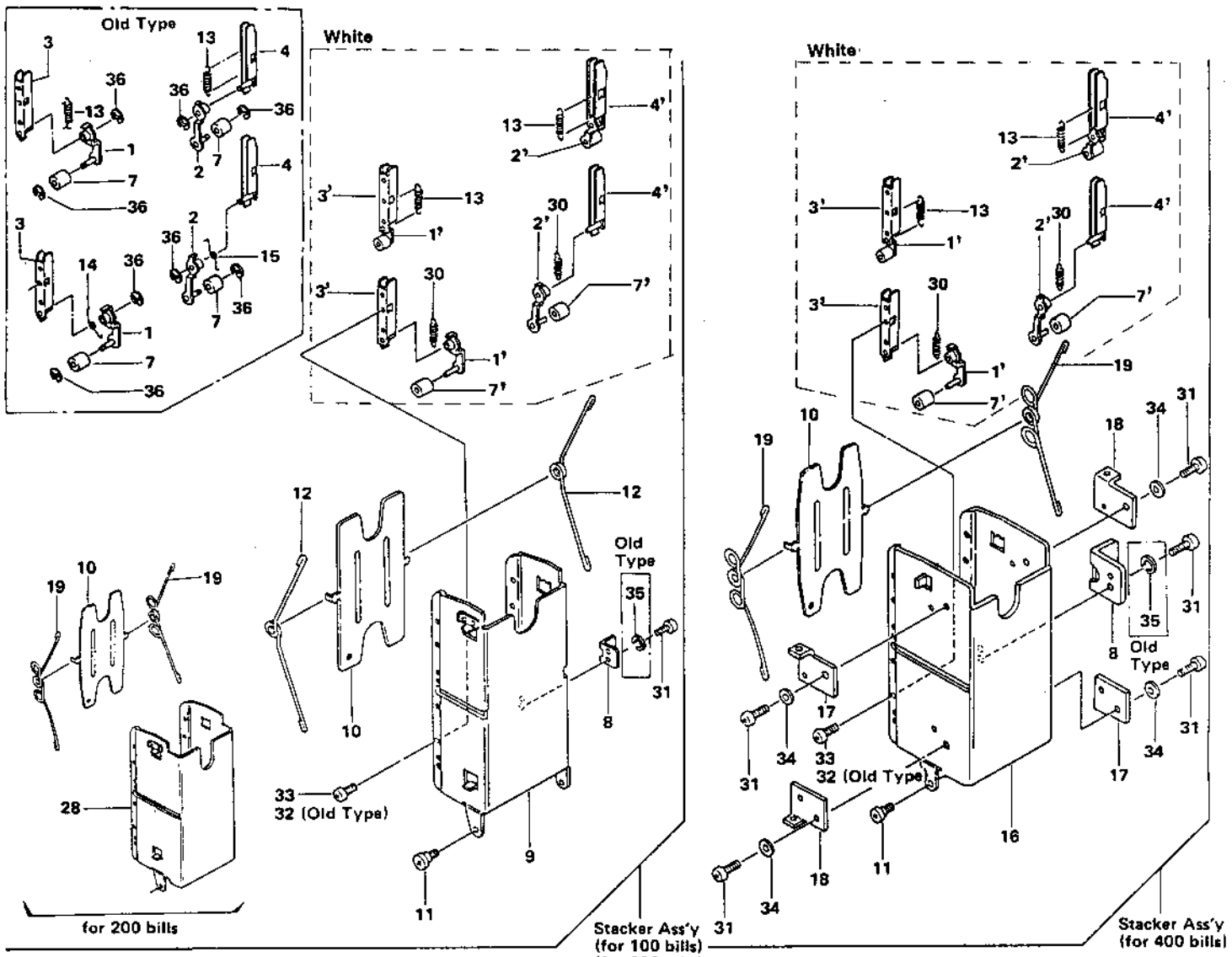

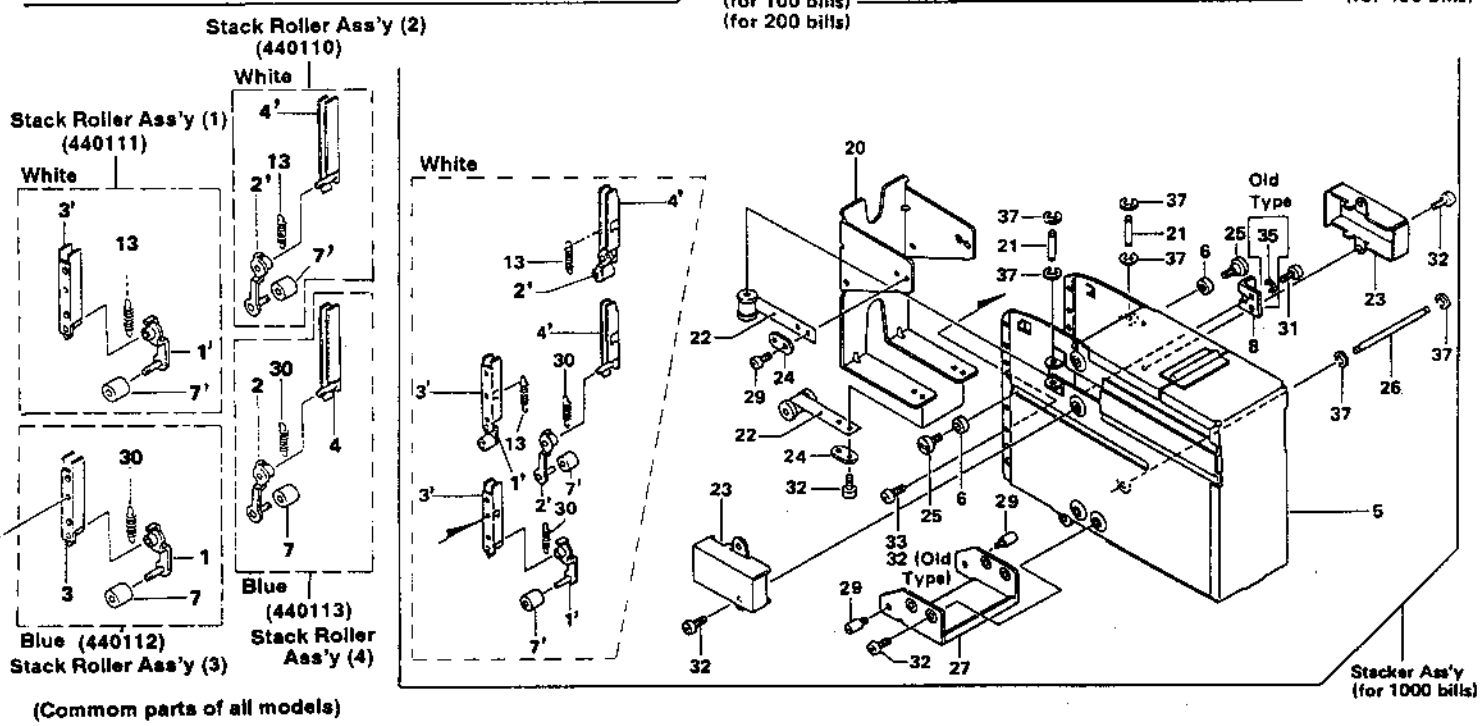

(Commom parts of all models)

INDEX No.	PART No.	DESCRIPTION	Q'TY	REMARKS	For 100bills	For 200bills	For 400bills	For 1000bills
1	★ 440478	Stack Roller Stay (R) (VA)	1	(Blue)	○	○	○	○
1'	★ 440440	Stack Roller Stay (R) (VA)	2	×(White)	○	○	○	○
	440114	Stack Roller Stay (R) Assy (Old type)	2		○		○	○
2	★ 440477	Stack Roller Stay (L) (VA)	1	(Blue)	○	○	○	○
2'	★ 440439	Stack Roller Stay (L) (VA)	2	×(White)	○	○	○	○
	440115	Stack Roller Stay (L) Assy (Old type)	2		○		○	○
3	★ 440475	Stack Guide (R) (VA)	1	(Blue)	○	○	○	○
3'	★ 440437	Stack Guide (R) (VA)	2	×(White)	○	○	○	○
	440116	Stack Guide (R) Assy (Old type)	2		○		○	○
4	★ 440476	Stack Guide (L) (VA)	1	(Blue)	○	○	○	○
4'	★ 440438	Stack Guide (L) (VA)	2	×(White)	○	○	○	○
	440117	Stack Guide (L) Assy (Old type)	2		○		○	○
5	440145	Stacker-1000 Assy (2)	1					○
6	440880	Plate Guide	2	Interchangeable				○
	440425	Plate Guide (Old type)	2					○
7	★ 440479	Stack Roller (VA)	2	(Blue)	○	○	○	○
7'	★ 440441	Stack Roller (VA)	4	×(White)	○	○	○	○
	440526	Stack Roller (Old type)	4		○		○	○
8	★ 440455	Safety Switch Lever (VA)	1	×	○	○	○	○
	440557	Safety Switch Lever (Old type)	1		○		○	○
9	440869	Stacker	1		○			
	440505	Stacker (Old type)	1		○			
10	440507	Stacker Plate	1		○	○	○	
11	440534	Arm Shaft	2		○	○	○	
12	440547	Stacker Spring	2		○			
13	440555	Stacker Roller Spring (C)	2		○	○	○	○
14	440559	Stacker Roller Spring (R) (Old type)	1		○		○	○
15	440560	Stacker Roller Spring (L) (Old type)	1		○		○	○
16	440583	Stacker (G)	1				○	
17	440586	Spring Tuck G1	2				○	
18	440587	Spring Tuck G2	2				○	
19	440588	Stacker Spring (G)	2			○	○	
20	440804	Stacker Plate	1					○
21	440808	Shaft (B)	2					○
22	440809	Stacker Spring 1000	4					○
23	440812	Cover (A)	2					○
24	440815	Plate	4					○
25	440830	Guide	2					○
26	440864	CS Shaft	1					○
27	440865	CS Cover	1					○
28	440901	Stacker 200	1			○		
29	412591	Mounting Stud (B)	2					○
30	★ 443560	Stack Roller Spring	2		○	○	○	○
31	900006	Screw (+/-)Pan-head M3 × 4	6		2	2	○	2
32	900008	Screw (+/-)Pan-head M3 × 6	16		4		4	○
33	904027	Self Tapping Screw (+)Pan-head 3 × 6	4		○	○	○	○
34	907002	Washer ϕ 3 × ϕ 6 × t0.5	4				○	
35	907201	Spring Washer M3	2		○		○	○
36	907401	Retaining Ring	8		○		○	○
37	907404	E-ring ϕ 3	6					○

The parts mark ★ are not interchangeable with the Old Type Parts.

12-2 NBE-20 SERIES

1 Housing and Control Box

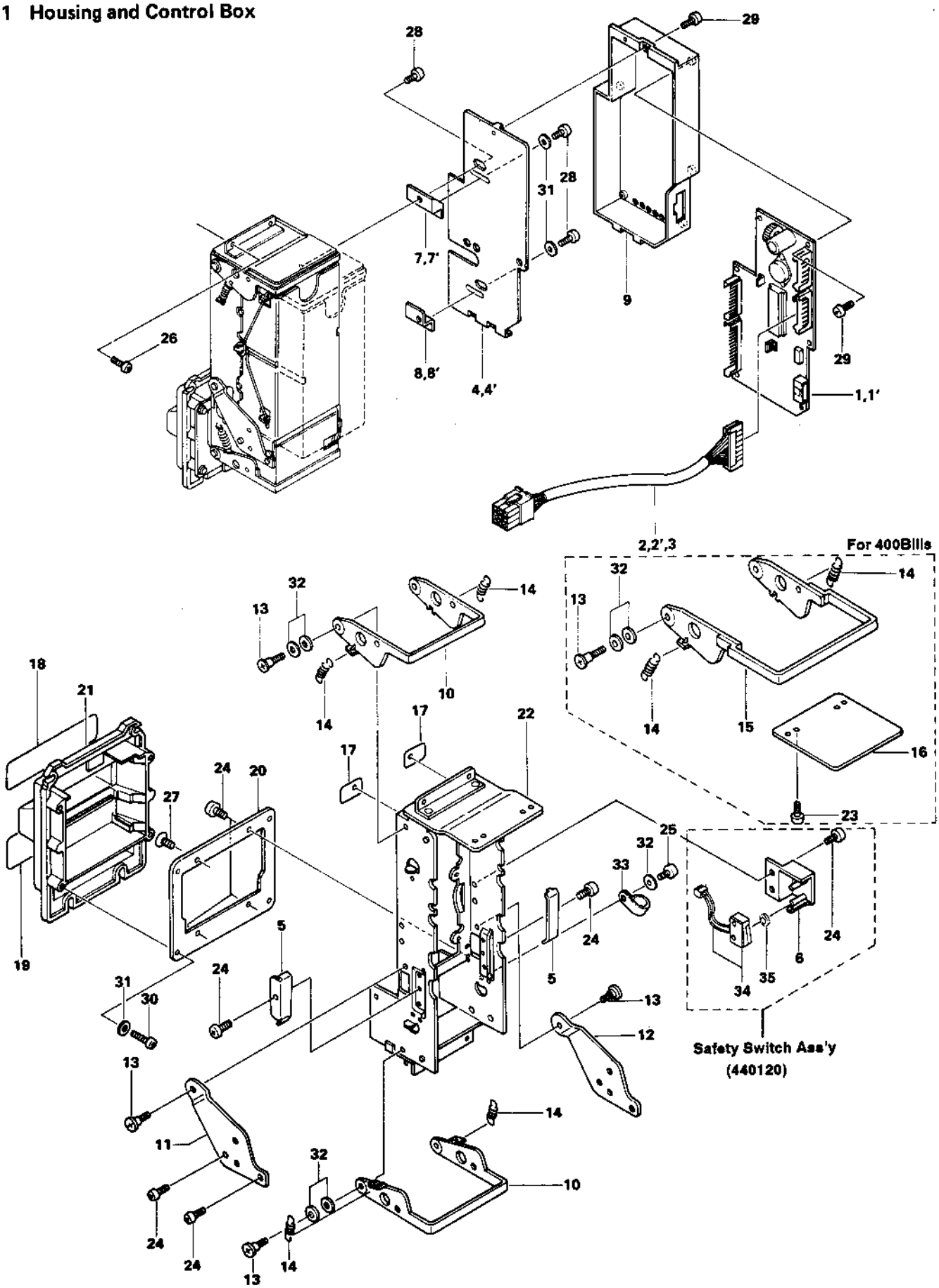

Index No.	Part No.	Description	Q'ty	Remarks	NBE-20	NBE-20B-400	NBE-21-400
1	440249	Control Board A'ssy	1		o	o	
1'	440259	Control Board A'ssy	1				o
2	440349	NBE Power Supply Harness A'ssy	1		o		
2'	440358	NBE-21 Power Supply Harness A'ssy	1				o
3	440354	NBE-20B-400 Power Supply Harness A'ssy	1			o	
4	440448	Control Box Base	1		o	o	
4'	440465	Control Box Base (2)	1				o
5	440449	Belt Guide	2		o	o	o
6	440451	Safety Switch Mounting Plate	1		o	o	o
7	440452	Base Leg (1)	1		o		
7'	440898	Base Leg (5)					o
8	440454	Base Leg (2)	1		o		
8'	440899	Base Leg (6)					o
9	440462	NBE Control Box Cover	1		o	o	o
10	440506	Latch	2		o	1	1
11	440518	Arm (R)	1		o	o	o
12	440519	Arm (L)	1		o	o	o
13	440534	Arm Shaft	8		o	o	o
14	440576	Latch Spring	4		o	o	o
15	440584	Latch (G)	1			o	o
16	440585	Stacker Roof (G)	1			o	o
17	440590	Lift Spring Seal	2		o	o	o
18	440839	Decal (3)	1		o	o	o
19	440856	Decal (6)	1		o	o	o
20	440859	NBE Mask Base	1		o	o	o
21	440861	Front Mask (H)	1		o	o	o
22	440868	Housing	1		o	o	o
23	900006	Screw	2	(+/–) Pan-head M3 x 0.5 x 4		o	o
24	900008	Screw	9	(+/–) Pan-head M3 x 0.5 x 6	o	o	o
25	900010	Screw	2	(+/–) Pan-head M3 x 0.5 x 10	o		o
26	900015	Screw	4	(+/–) Pan-head M4 x 0.7 x 8	o	o	o
27	902001	Screw	3	(+) Flush M3 x 0.5 x 6	o	o	o
28	904001	Tapping Screw	2	(+) Pan-head 3 x 1 x 8	o		o
29	905011	Tapping Screw	7	(+) Pan-head 3 x 1 x 8	o	o	o
30	906035	Screw	4	(+/–) Truss-head M3 x 0.5 x 12	o	o	o
31	907001	Washer	7	ϕ3.3 x t0.5 x ϕ8	o	5	o
32	907005	Washer	8	ϕ4 x ϕ8 x t0.5	o	o	o
33	927019	Nylon Clip	1	SL-4N	o	o	o
34	440099	Safety Switch Assy	1		o		o
34-1	993026	Safety Switch	1		o		o
34-2	440310	Safety Switch Harness Assy	1		o		o
34'	440098	Safety Switch (B) Assy	1			o	
34'-1	993026	Safety Switch	1			o	
34'-2	440332	Safety Switch (B) Harness Assy	1			o	
35	907209	Spring Washer ϕ2.1 x ϕ4.4 x t0.5	2		o	o	o

12. EXPLODED VIEW AND PARTS LIST

12-2 NBE-20 SERIES

2 Main Chassis A'ssy

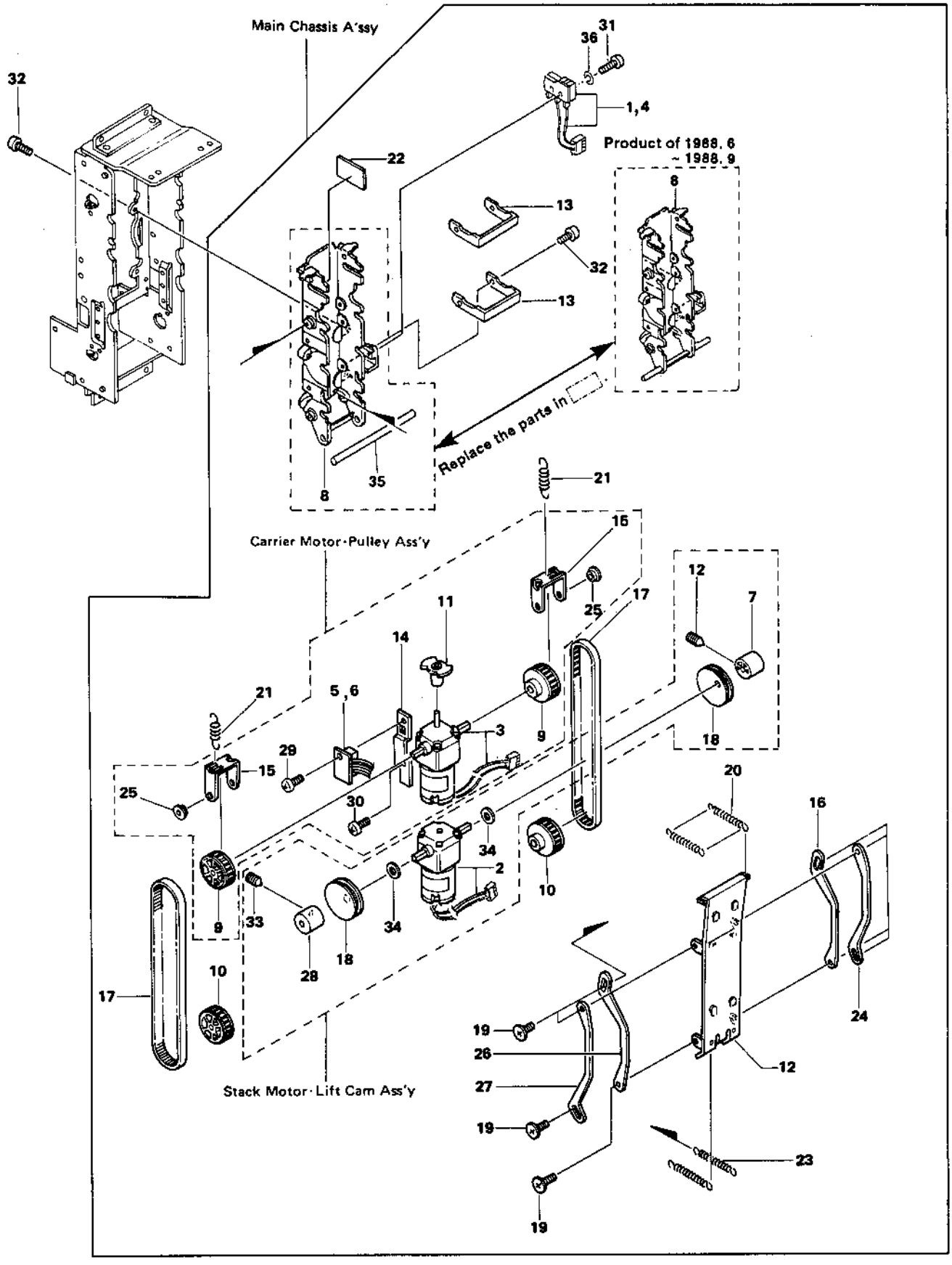

Index No.	Part No.	Description	Q'ty	Remarks	NBE-20 NBE-21-400	NBE-20B-400
1	440121	Carrier Switch A'ssy	1		o	
2	440094	Stack Motor Harness Assy	1		o	
2-1	440130	Stack Motor Assy	1		o	
2-2	440304	Stack Motor Harness Assy	1		o	
2'	440095	Stack Motor Harness (B) Assy	1			o
2'-1	440130	Stack Motor Assy	1			o
2'-2	440316	Stack Motor Harness (B) Assy	1			o
3	440093	Carrier Motor Harness Assy	1		o	
3-1	440131	Carrier Motor Assy	1		o	
3-2	440311	Carrier Motor Harness Assy	1		o	
3'	440096	Carrier Motor Harness (B) Assy	1			o
3'-1	440131	Carrier Motor Assy	1			o
3'-2	440323	Carrier Motor Harness (B) Assy	1			o
4	440140	Carrier Switch (B) A'ssy	1			o
5	440203	Interrupter Board (1) A'ssy	1		o	
6	440213	Interrupter Board (1) (B) A'ssy	1			o
7	440406	Carrier Cam	1		o	o
8	440456	Main Chassis	1		o	o
9	440459	Large Pulley (1)	2		o	o
10	440460	Large Pulley (2)	2		o	o
11	440463	Tachometer	1		o	o
12	440504	Lift Base	1		o	o
13	440514	Motor Bracket	2		o	o
14	440516	Tachometer Bracket	1		o	o
15	440529	Spring Bracket	2		o	o
16	440530	Lift Lever (1) R	1		o	o
17	440533	Belt (2)	2		o	o
18	440535	Lift Cam	2		o	o
19	440539	Lift Lever Shaft	8		o	o
20	440542	Lift Spring (1)	2		o	o
21	440543	Belt Spring	2		o	o
22	440558	Insulated Sheet	1		o	o
23	440564	Lift Spring (2)	2		o	o
24	440568	Lift Lever (2) R	1		o	o
25	440570	Guide Spacer	2		o	o
26	440824	Lift Lever (1) L	1		o	o
27	440825	Lift Lever (2) L	1		o	o
28	443598	Cam Stopper	1		o	o
29	900008	Screw	1	(+/–) Pan-head M3 x 0.5 x 5	o	o
30	904001	Plus Tight Screw	1	(+) Pan-head 3 x 1 x 8	o	o
31	905002	Tapping Screw	2	(+) Pan-head 2 x 10	o	o
32	905015	Tapping Screw	8	(+) Pan-head 3 x 1 x 6	o	o
33	906007	Set Screw	2	Flat Tip M3 x 0.5 x 4	o	o
34	907908	Polyslider	2		o	o
35	440536	Large Pully Shaft	1		o	o
36	907209	Spring Washer	2	ϕ2.1 x ϕ4.4 x t0.5	o	o

12. EXPLODED VIEW AND PARTS LIST

12-2 NBE-20 SERIES

3 Chute (A) and Chute (B) A'ssy

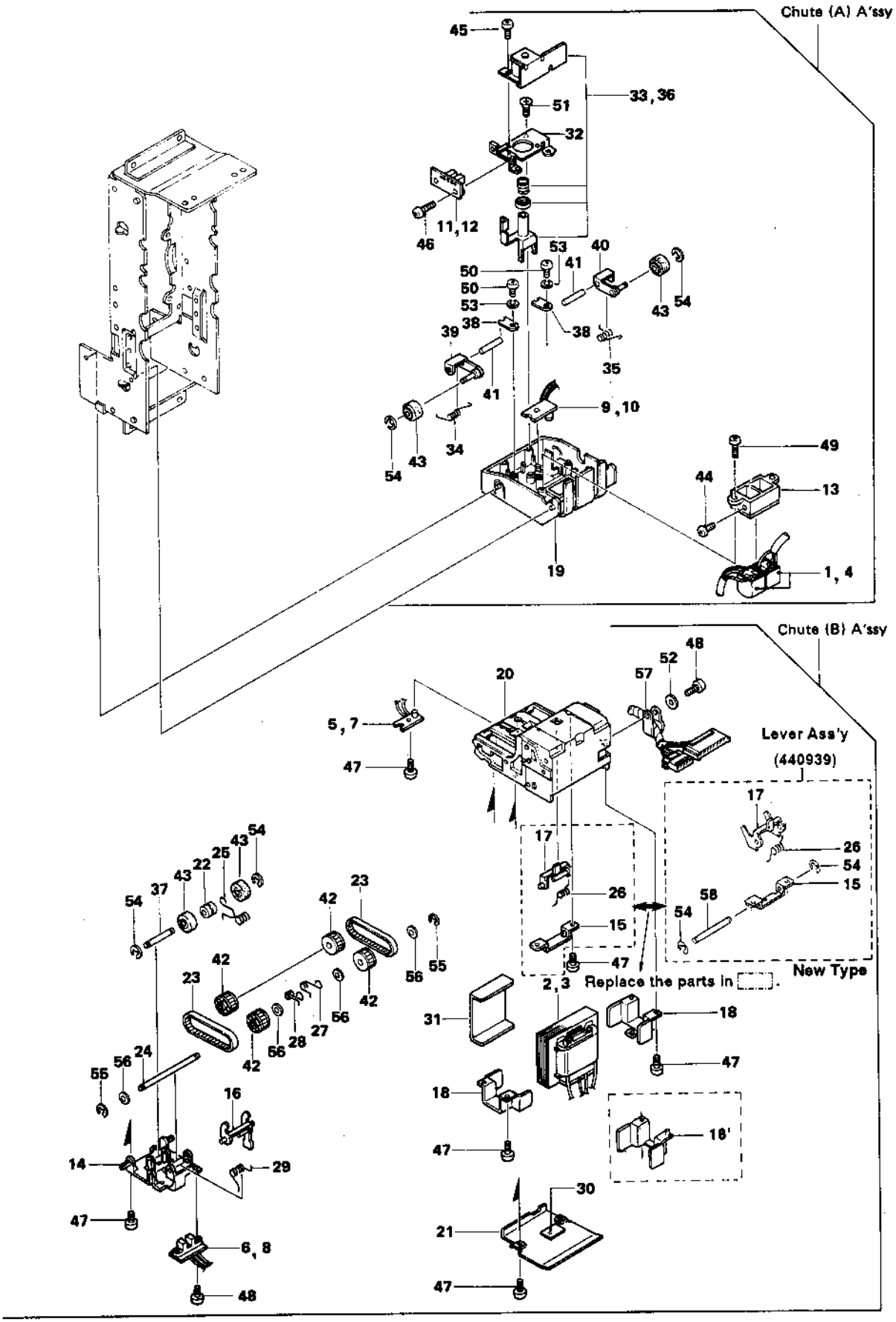

Index No.	Part No.	Description	Q'ty	Remarks	NBE-20	NBE-20B-400	NBE-21-400
1	440004	Magnetic Head A'ssy	1		o		o
2	440122	Transformer A'ssy	1		o		
3	440133	Transformer B A'ssy	1			o	
4	440008	Magnetic Head B A'ssy	1			o	
5	440205	Photo-board (1) A'ssy	1		o		o
6	440209	Interrupter Board (2) A'ssy	1		o		o
7	440215	Photo-board (1) B A'ssy	1			o	
8	440219	Interrupter Board (2) B A'ssy	1			o	
9	440227	Photo-board (2) 29 A'ssy	1		o		o
10	440231	Photo-board (2) – 27B A'ssy	1			o	
11	440251	Interrupter Board (3) A'ssy	1		o		o
12	440253	Interrupter Board (3) A'ssy	1			o	
13	440430	Head Bracket 29	1		o	o	o
14	440442	Shaft Bracket	1		o	o	o
15 ★	440443	Prevention (of hanging) Lever Bracket	1	←] ×	o	o	o
	440807	Prevention (of hanging) Lever Bracket	1		o	o	o
16	440444	Drawing Prevention Lever	1		o	o	o
17 ★	440445	Prevention (of hanging) Lever	1	←] ×	o	o	o
	440940	Prevention (of hanging) Lever	1		o	o	o
18	440450	Transformer Bracket	2		o	o	
18'	440473	Transformer Bracket (2)	1		o	o	
19	440457	Chute (A)	1		o	o	o
20	440458	Chute (B)	1		o	o	o
21	440510	Bottom Plate	1		o	o	o
22	440528	Pinch Roller Spacer	1		o	o	o
23	440532	Belt (1)	2		o	o	o
24	440538	Small Pulley Shaft	1		o	o	o
25	440544	Pinch Roller Spring	1		o	o	o
26	440546	Lever Spring	1		o	o	o
27	440550	Pinch Roller Spring (R)	1		o	o	o
28	440551	Pinch Roller Spring (L)	1		o	o	o
29	440554	Drawing Prevention Lever Spring	1		o	o	o
30	440558	Insulated Sheet	1		o	o	
31	440563	Shield Plate	1		o	o	
32	440857	Solenoid Bracket	1		o	o	o
33	440873	Shutter Solenoid A'ssy	1		o		o
34	440881	Pinch Roller Spring (R)	1		o	o	o
35	440882	Pinch Roller Spring (L)	1		o	o	o
36	440887	Shutter Solenoid (B) A'ssy	1			o	
37	440893	Pinch Roller Pin	1		o	o	o
38	443519	Shaft Stopper	2		o	o	o
39	443522	Pinch Roller Arm (R)	1		o	o	o
40	443523	Pinch Roller Arm (L)	1		o	o	o
41	443532	Pinch Roller Shaft	2		o	o	o
42	412408	Timing Pulley (B)	4		o	o	o
43	412418	Pinch Roller	4		o	o	o
44	900001	Screw	4	(+) Pan-head M2 x 0.25 x 2.5	o	o	o
45	900006	Screw	2	(+/–) Pan-head M3 x 0.5 x 4	o	o	o
46	900009	Screw	2	(+/–) Pan-head M3 x 0.5 x 8	o	o	o
47	900018	Screw	13	(+/–) Pan-head M3 x 0.5 x 5	o	o	o
48	904001	Tapping Screw	2	(+) Pan-head 3 x 1 x 8	o	o	o
49	905011	Tapping Screw	2	(+/–) Pan-head 3 x 1 x 8	o	o	o
50	905015	Tapping Screw	2	(+/–) Pan-head 3 x 1 x 6	o	o	o
51	906057	Tapping Screw	2	(+) Flush 3 x 1 x 6	o	o	o
52	907001	Washer	1		o	o	o
53	907201	Spring Washer	2	M3 (1.1 x 0.7)	o	o	o
54	907403	E-ring	4	2	o	o	o
55	907404	E-ring	2	3	o	o	o
56	907906	Polyslider	4	ϕ4.1 x ^{t}0.13 x ϕ6.5	o	o	o
57	927019	Nylon Clip	1		o	o	o
58	443554	Lever Shaft	1		o	o	o

Note: In regard to Parts of Magnetic Head Assembly, refer to " TABLE of Magnetic Head Bracket Assembly ".
The parts mark ★ are not interchangeable with the Old Type Parts.

12. EXPLODED VIEW AND PARTS LIST

12-2 NBE-20 SERIES

4 Stacker A'ssy

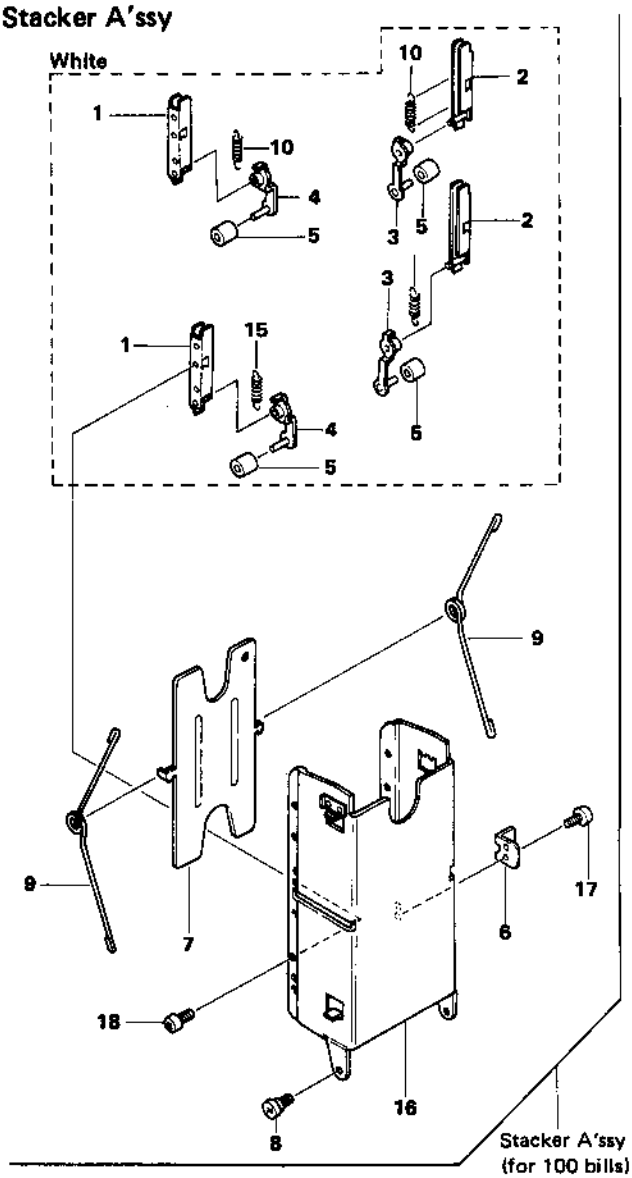

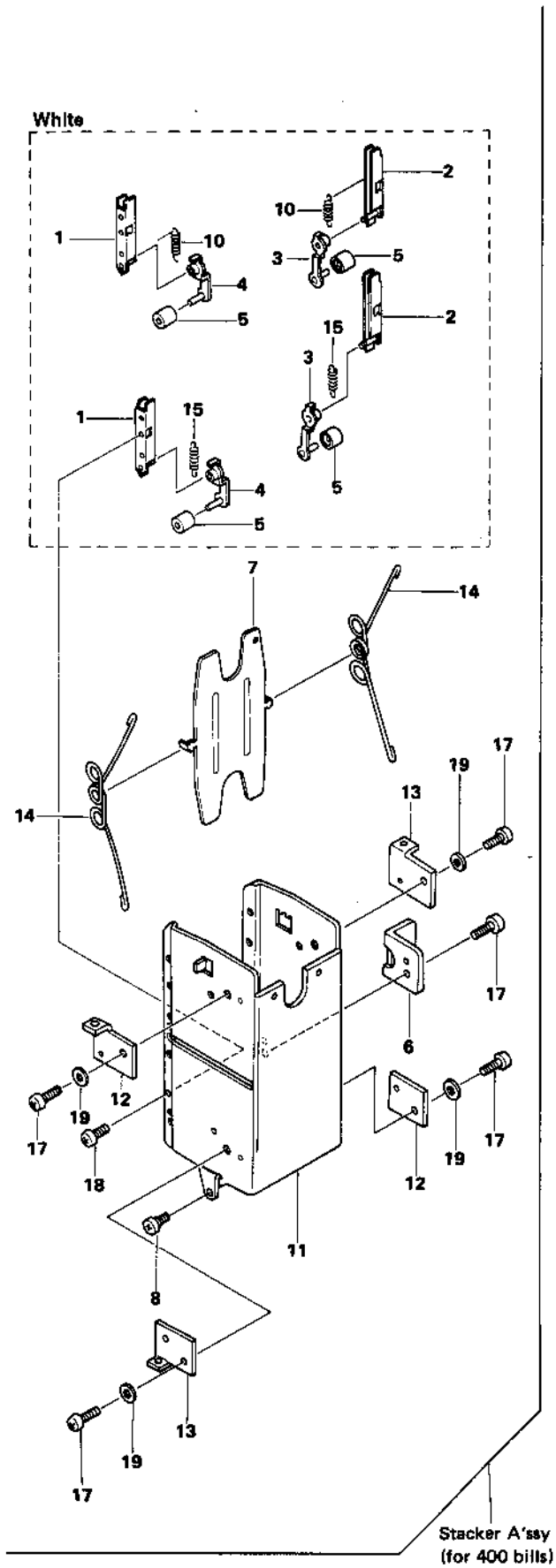

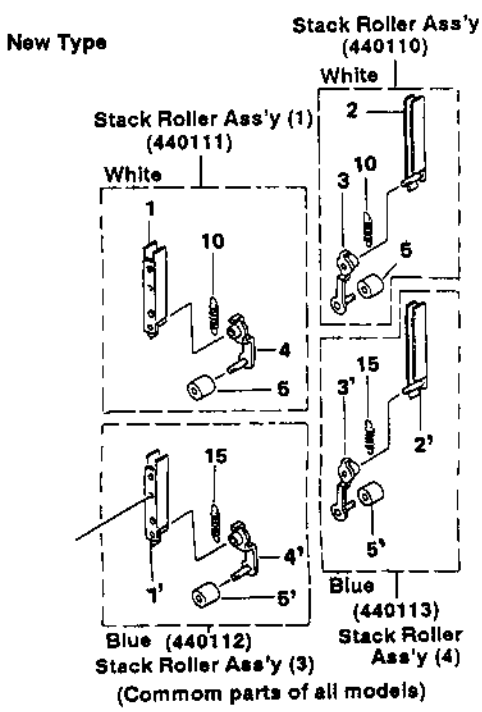

Index No.	Part No.	Description	Q'ty	Remarks	NBE-20	NBE-20B-400 NBE-21-400
1	440437	Stack Guide (R)	2	White	o	o
1'	440475	Stack Guide (R)	1	Blue	o	o
2	440438	Stack Guide (L)	2	White	o	o
2'	440476	Stack Guide (L)	1	Blue	o	o
3	440439	Stack Roller Stay (L)	2	White	o	o
3'	440477	Stack Roller Stay (L)	1	Blue	o	o
4	440440	Stack Roller Stay (R)	2	White	o	o
4'	440478	Stack Roller Stay (R)	1	Blue	o	o
5	440441	Stack Roller	4	White	o	o
5'	440479	Stack Roller	2	Blue	o	o
6	440455	Safety Switch Lever	1		o	o
7	440507	Stacker Plate	1		o	o
8	440534	Arm Shaft	2		o	o
9	440547	Stacker Spring	2		o	
10	440555	Stack Roller Spring (C)	2		o	o
11	440583	Stacker (G)	1			o
12	440586	Spring Tuck G1	2			o
13	440587	Spring Tuck G2	2			o
14	440588	Stacker Spring (G)	2			o
15	443560	Stack Roller Spring	2		o	o
16	440869	Stacker	1		o	
17	900006	Screw	6	(+/–) Pan-head M3 x 0.5 x 4	o	o
18	905015	Tapping Screw	4	(+) Pan-head 3 x 1 x 6	o	o
19	907002	Washer	4	ϕ3 x ^{t}0.5 x ϕ6		o

12-3 Magnetic Head Bracket Ass'y

TABLE of Magnetic Head Bracket Assembly

Assembly No. and SHAPE	COMPONENTS				Models Used
		Parts No.	Parts Name	Qty	
440152 Head Bracket–20 Ass'y 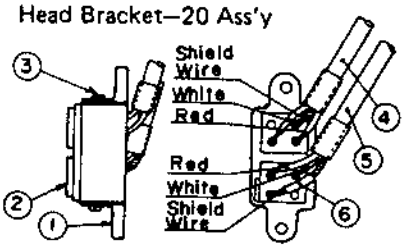	1	440430	Head Bracket–20	1	NB-27A-400
	2	412740	Magnetic Head	2	NB-29A
	3	900001	Screw (+) Pan-head M2 x 0.25 x 2.5	4	NB-29A-400
	4	440308	Magnetic Head (1) Module Harness Ass'y	1	NB-29A-1000
	5	440309	Magnetic Head (2) Module Harness Ass'y	1	NBE-20A
	6	ϕ1.5 x 8$^{\ell}$	Vinyl Tube	1	NBE-21-400
		440004	Magnetic Head Ass'y (Includ (2), (4), (5))	1	NB-2JA-400
		440016	Magnetic Head Harness Ass'y 1–20 (Includ (2),(4))		
		440017	Magnetic Head Harness Ass'y 2–20 (Includ (2),(5))		
440168 Head Bracket–23B Ass'y 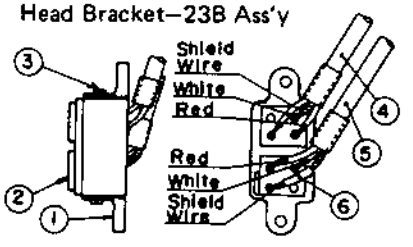	1	440430	Head Bracket–20	1	NB-27B-400
	2	412740	Magnetic Head	2	NB-29B-400
	3	900001	Screw (+) Pan-head M2 x 0.25 x 2.5	4	NBE-20B
	4	440320	Magnetic Head (1) B Module Harness Ass'y	1	NBE-20B-400
	5	440321	Magnetic Head (2) B Module Harness Ass'y	1	
	6	ϕ1.5 x 8$^{\ell}$	Vinyl Tube	1	
		440008	Magnetic Head Ass'y (Includ (2), (4), (5))	1	
		440018	Magnetic Head B Harness Ass'y 1–20 (Includ (2),(4))		
		440019	Magnetic Head B Harness Ass'y 2–20 (Includ (2),(5))		

13. EXTERNAL MEASUREMENTS DIAGRAMS

NB-20 SERIES

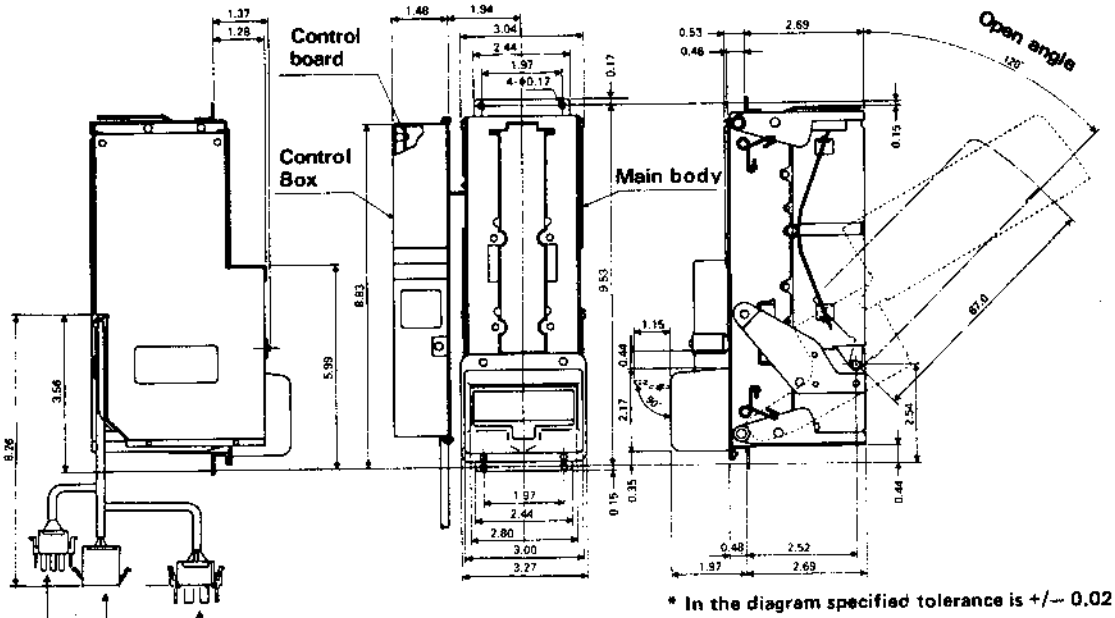

* In the diagram specified tolerance is +/– 0.02 inch.

MOLEX 4 Pin Plug Housing 3191-04P
Contact 1380T

AMP 4 Pin Plus Housing 1-480702-0
Contact 350689-1

AMP (Option) 9 Pin Plug Housing 1-480706-0
Contact 350689-1

[Note]
1. This figure shows the dimensions of Bill Validator NB-29 for US $1 and $5 bills.
2. In the figure, dot-bar lines indicate the position for taking out the bills, and dotted lines for cleaning.

NB-20B SERIES

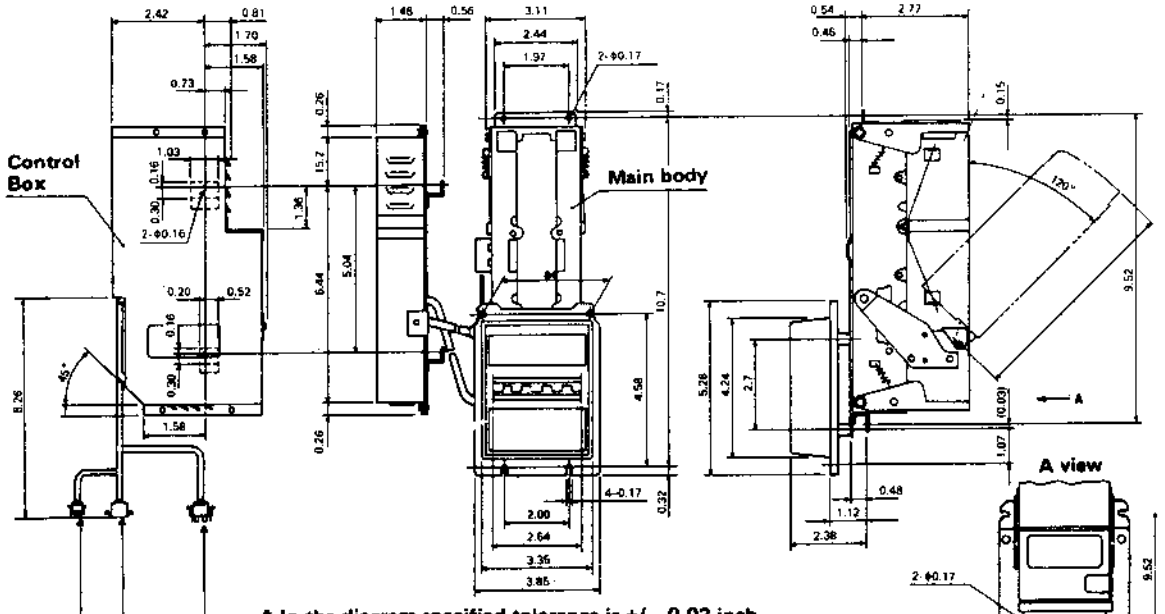

* In the diagram specified tolerance is +/– 0.02 inch.

MOLEX 4 Pin Plug Housing 3191-04P
Contact 1380T

AMP 4 Pin Plus Housing 1-480702-0
Contact 350689-1

AMP (Option) 9 Pin Plug Housing 1-480706-0
Contact 350689-1

[Note]
1. This figure shows the dimensions of Bill Validator NB-27B for US $1 and $5 bills.
2. In the figure, dot-bar lines indicate the position for taking out the bills, and dotted lines for cleaning.

13. EXTERNAL MEASUREMENTS DIAGRAMS

NB-20-400 SERIES

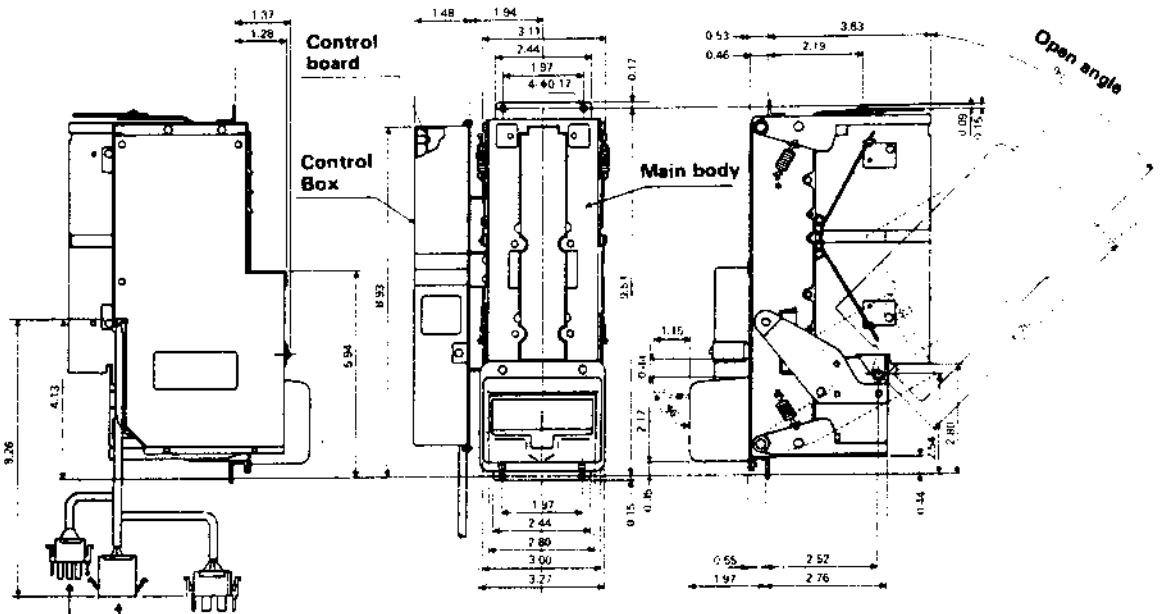

* In the diagram specified tolerance is +/– 0.02 inch.

MOLEX	4 Pin Plug Housing	3191-04P
	Contact	1380T
AMP	4 Pin Plus Housing	1-480702-0
	Contact	350689-1
AMP (Option)	9 Pin Plug Housing	1-480706-0
	Contact	350689-1

[Note]
1. This figure shows the dimensions of Bill Validator NB-20-400.
2. In the figure, dot-bar lines indicate the position for taking out the bills, and dotted lines for cleaning.

NB-20-1000 SERIES

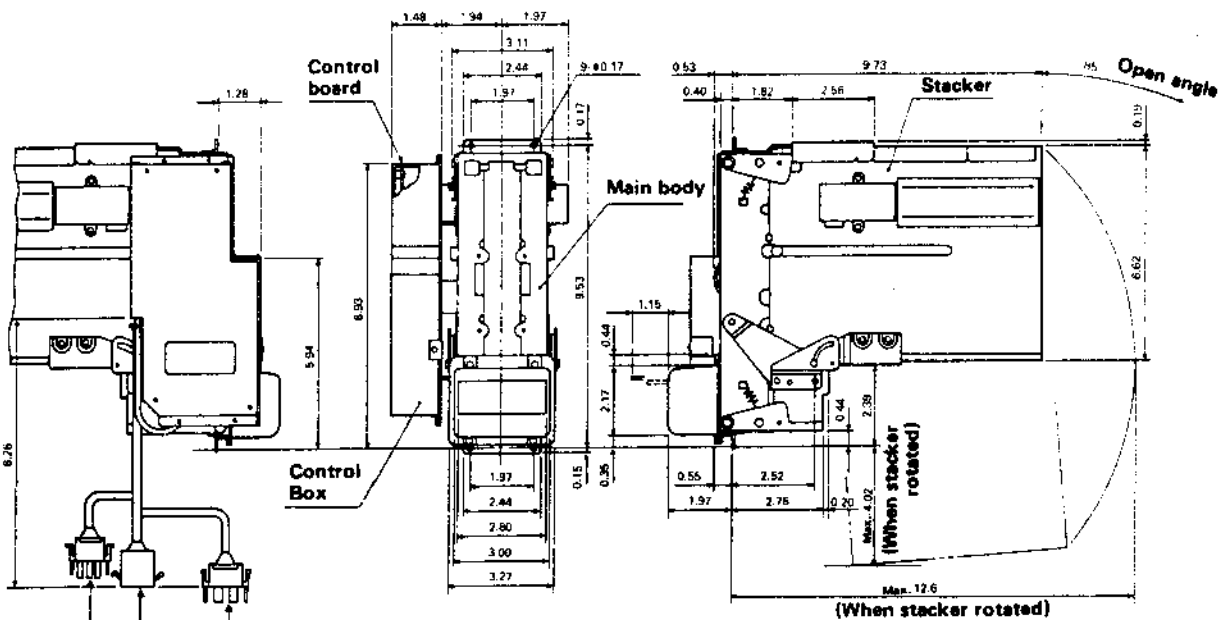

* In the diagram specified tolerance is +/– 0.02 inch.

MOLEX	4 Pin Plug Housing	3191-04P
	Contact	1380T
AMP	4 Pin Plus Housing	1-480702-0
	Contact	350689-1
AMP (Option)	9 Pin Plug Housing	1-480706-0
	Contact	350689-1

[Note]
This figure shows the dimensions of Bill Validator NB-29-1000 for US $1 and $5 bills.

NBE-20 SERIES

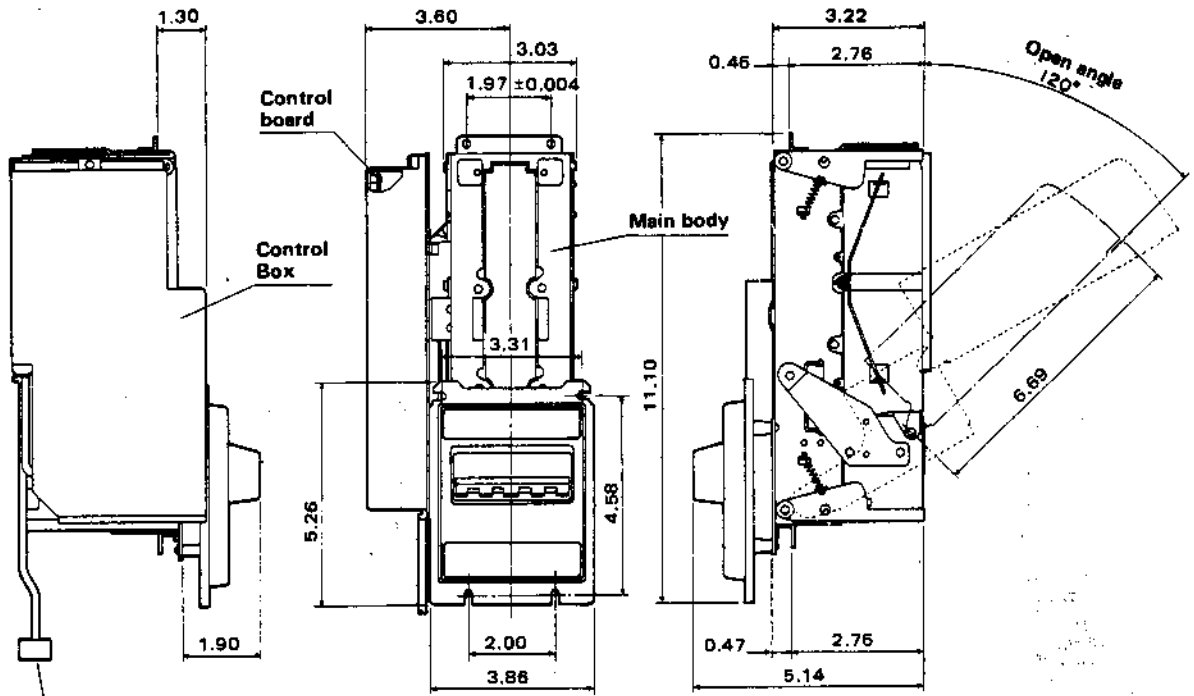

[Note]

1. This figure shows the dimensions of Bill Validator NBE-20 for US $1 and $5 bills.
2. In the figure, dot-bar lines indicate the position for taking out the bills, and dotted lines for cleaning.

In the diagram specified tolerence is +/−0.02 inch.

Distributed by: