Vendo® Engineering *Uni-2 Set Up Guide*

Size: 20.8oz / 615ml **Rev. A** **Date 06/19/01**
Pkg. Description/Type: DANNON WATER WITH SPORT CAP
Franchise: DANNON **KIT#**

Column Setup

Cam Setting	Back Spacer	Neck Guide Locations	Gage Bar Clip Location	Gage Bar Location	Side Spacer	Sold Out Flap	Sold Out Spacer
1	C	N/A	N/A	#2	1060686 Loc. #2	Short* 1083449	1077457

Note: To properly vend product the Uni-2 must have the columns set up as illustrated. *Spring Loc. Rt (Low Tension) side.

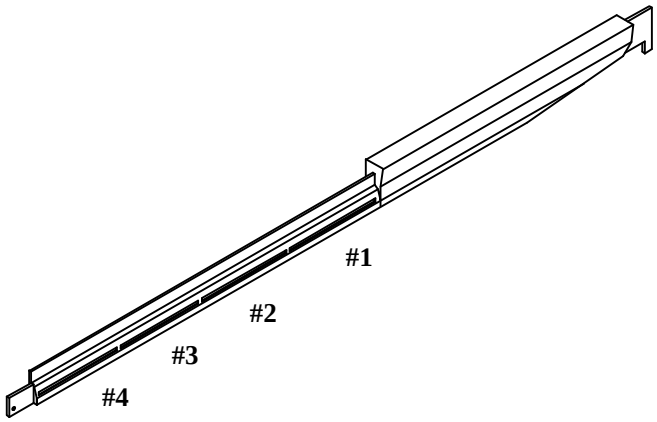

Gage Bar Clip Location

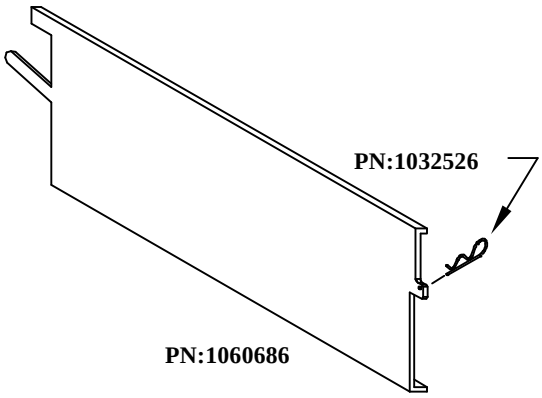

Shim/Spacer

Set Up Guide

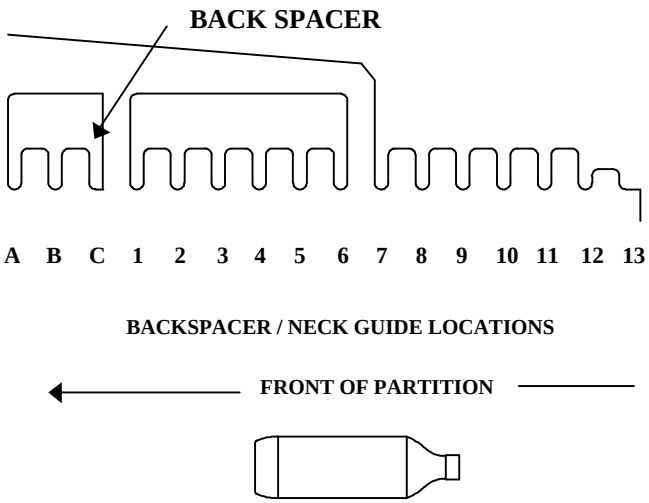

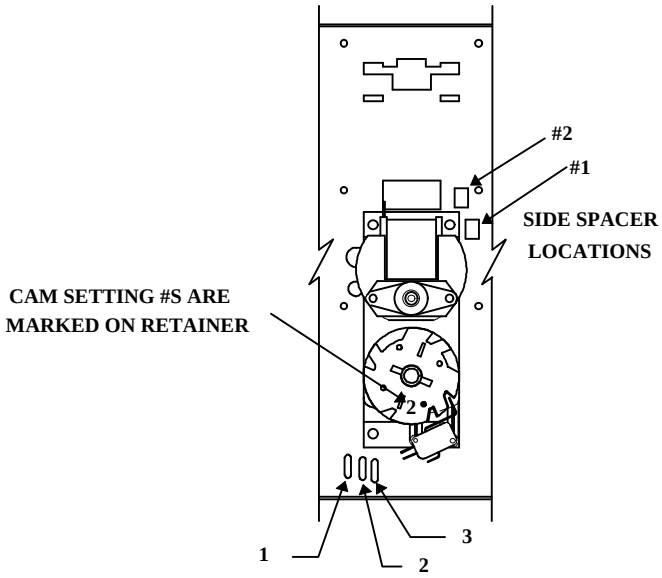

Note: Placement of bottle caps is to the back of the vendor

FOR OTHER PRODUCT SET-UP GUIDES, CONTACT THE VENDO COMPANY
TEL: (559) 439-1770 FAX: (559) 650-3455.

Installation Instruction #